JOB NAME	TRUSS NAME	QUANTITY	PLY	JOB DESC. Woodcreek / Adkins	DRWG NO.
211770	C1	2	1	TRUSS DESC.	

KAMLOOPS TRUSS LTD., Kamloops, BC V2H 1G3

Version 8.420 S Mar 22 2021 MiTek Industries, Inc. Thu May 27 07:05:58 2021 Page 1

ID:X2qvwXGfFYBXzZFl6ldjmRzCaiR-wT_W81m_mLCvmInFhfA9uyXCEIklOWpLvMEOGAzCLWt

Scale: 1/4"=1'

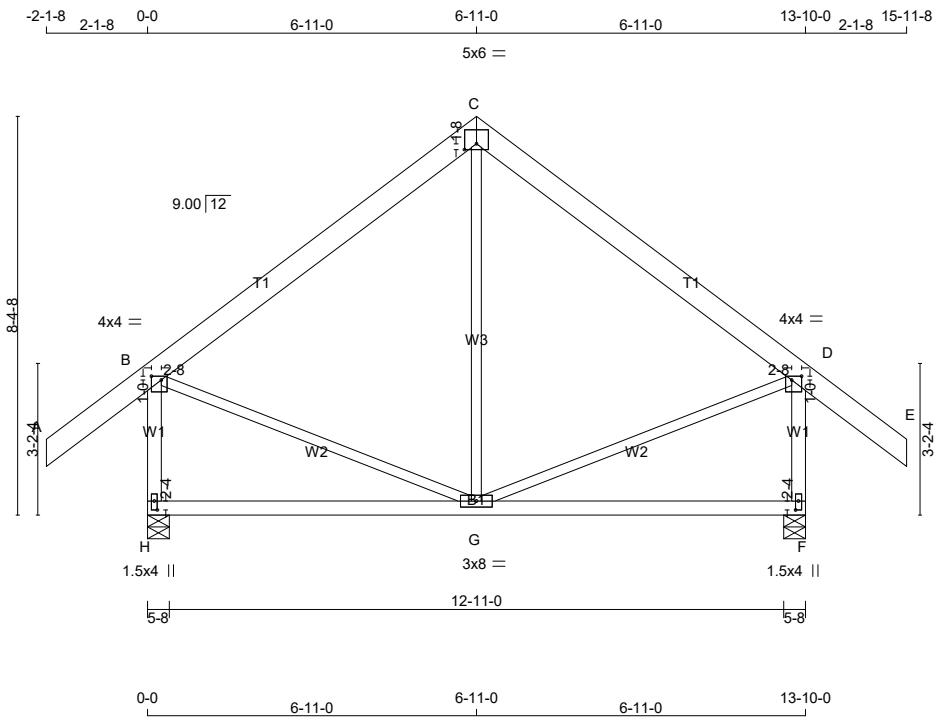

TOTAL WEIGHT = 2 X 81 = 162 lb

[M][F]

LUMBER

N. L. G. A. RULES

CHORDS	SIZE		LUMBER	DESCR.
A - C	2x6	DRY	1650F 1.5E	SPF
C - E	2x6	DRY	1650F 1.5E	SPF
H - B	2x4	DRY	1650F 1.5E	SPF
F - D	2x4	DRY	1650F 1.5E	SPF
H - F	2x4	DRY	1650F 1.5E	SPF

ALL WEBS

DIMENSIONS, SUPPORTS AND LOADINGS SPECIFIED BY FABRICATOR TO BE VERIFIED BY BUILDING DESIGNER

BEARINGS

	FACTORED GROSS REACTION		MAXIMUM GROSS REACTION			INPUT BRG	REQRD BRG
JT	VERT	HORZ	DOWN	HORZ	UPLIFT	IN-SX	IN-SX
H	1559	0	1559	0	0	5-8	1-11
F	1559	0	1559	0	0	5-8	1-11

UNFACTORED REACTIONS

	1ST LCASE	MAX./MIN. COMPONENT REACTIONS					
JT	COMBINED	SNOW	LIVE	PERM.LIVE	WIND	DEAD	SOIL
H	1071	882 / 0	0 / 0	0 / 0	0 / 0	189 / 0	0 / 0
F	1071	882 / 0	0 / 0	0 / 0	0 / 0	189 / 0	0 / 0

BEARING MATERIAL TO BE SPF NO.2 OR BETTER AT JOINT(S) H, F

BRACING

TOP CHORD TO BE SHEATHED OR MAX. PURLIN SPACING = 6.25 FT.
MAX. UNBRACED BOTTOM CHORD LENGTH = 10.00 FT OR RIGID CEILING DIRECTLY APPLIED.

ALL PITCH BREAKS AND PERIMETER CORNER JOINTS MUST BE LATERALLY RESTRAINED.

DESIGN CRITERIA

SPECIFIED LOADS:

TOP	CH.	LL	=	48.1	PSF
		DL	=	5.0	PSF
BOT	CH.	LL	=	0.0	PSF
		DL	=	7.0	PSF
TOTAL	LOAD		=	60.0	PSF

SPACING = 24.0 IN. C/C

THIS TRUSS IS DESIGNED FOR RESIDENTIAL OR SMALL BUILDING REQUIREMENTS OF PART 9, NBCC 2015

THIS DESIGN COMPLIES WITH:
- PART 9 OF BCBC 2018 , ABC 2019
- PART 9 OF OBC 2012 (2019 AMENDMENT)
- CSA 086-14
- TPIC 2014

(55 % OF 83.6 P.S.F. G.S.L. PLUS 2.1 P.S.F. RAIN LOAD) EQUALS 48.1 P.S.F. SPECIFIED ROOF LIVE LOAD

ALLOWABLE DEFL.(LL)= L/180 (0.92")
CALCULATED VERT. DEFL.(LL) = L/ 999 (0.01")
ALLOWABLE DEFL.(TL)= L/180 (0.92")
CALCULATED VERT. DEFL.(TL) = L/ 999 (0.05")

CSI: TC=0.33/1.00 (B-C:1) , BC=0.20/1.00 (F-G:4) , WB=0.35/1.00 (C-G:1) , SSI=0.26/1.00 (B-C:1)

CONTINUED ON PAGE 2

JOB NAME	TRUSS NAME	QUANTITY	PLY	JOB DESC. Woodcreek / Adkins	DRWG NO.
211770	C1	2	1	TRUSS DESC.	

KAMLOOPS TRUSS LTD., Kamloops, BC V2H 1G3

ID:X2qvwXGfFYBXzZFl6ldjmRzCaiR-OfYuMNmcXfKmOSLRFNhOQ93N_i4_7z3V80_ypczCLWs

NOTES
EXCEPT

DRY: SEASONED LUMBER.

PLATES (table is in inches)

JT	TYPE	PLATES	W	LEN	Y	X
B	TMVW-p	MT20	4.0	4.0	1.00	2.50
C	TTW-p	MT20	5.0	6.0	1.50	3.00
D	TMVW-p	MT20	4.0	4.0	1.00	2.50
F	BMV1+p	MT20	1.5	4.0	2.25	0.75
G	BMWWW-t	MT20	3.0	8.0		
H	BMV1+p	MT20	1.5	4.0	2.25	0.75

LOADING

TOTAL LOAD CASES: (4)

C H O R D S

MEMB. FR-TO	MAX. FACTORED FORCE (LBS)	FACTORED VERT. LOAD LC1 (PLF) FROM	TO	MAX CSI (LC)	MAX. UNBRAC LENGTH
A- B	0 / 106	-156.6	-156.6	0.19 (1)	10.00
B- C	-671 / 0	-156.6	-156.6	0.33 (1)	6.25
C- D	-671 / 0	-156.6	-156.6	0.33 (1)	6.25
D- E	0 / 106	-156.6	-156.6	0.19 (1)	10.00
H- B	-1513 / 0	0.0	0.0	0.17 (1)	7.44
F- D	-1513 / 0	0.0	0.0	0.17 (1)	7.44
H- G	0 / 0	-17.5	-17.5	0.20 (4)	10.00
G- F	0 / 0	-17.5	-17.5	0.20 (4)	10.00

W E B S

MEMB. FR-TO	MAX. FACTORED FORCE (LBS)	MAX CSI (LC)
G- C	-278 / 77	0.35 (1)
B- G	0 / 578	0.13 (1)
G- D	0 / 578	0.13 (1)

DOL LUMBER=1.00 NAIL=1.00 LS BEND=1.10 COMP=1.10 SHEAR=1.10
TENS= 1.10

COMPANION LIVE LOAD FACTOR = 1.00

TRUSS PLATE MANUFACTURER IS NOT RESPONSIBLE FOR QUALITY CONTROL IN THE TRUSS MANUFACTURING PLANT .

NAIL VALUES

PLATE	GRIP(DRY) (PSI) MAX	MIN	SHEAR (PLI) MAX	MIN	SECTION (PLI) MAX	MIN
MT20	650	371	1747	788	1987	1873

PLATE PLACEMENT TOL. = 0.250 inches

PLATE ROTATION TOL. = 5.0 Deg.

JSI GRIP= 0.88 (B) (INPUT = 0.90)
JSI METAL= 0.42 (H) (INPUT = 1.00)

JOB NAME	TRUSS NAME	QUANTITY	PLY	JOB DESC. Woodcreek / Adkins	DRWG NO.
211770	C2	2	1	TRUSS DESC.	

KAMLOOPS TRUSS LTD., Kamloops, BC V2H 1G3

Version 8.420 S Mar 22 2021 MiTek Industries, Inc. Thu May 27 07:06:01 2021 Page 1

ID:X2qvwXGfFYBXzZFl6ldjmRzCaiR-K1gem3os3GbUdmVqNoksVa9gzVdkbrpnbKT2tVzCLWq

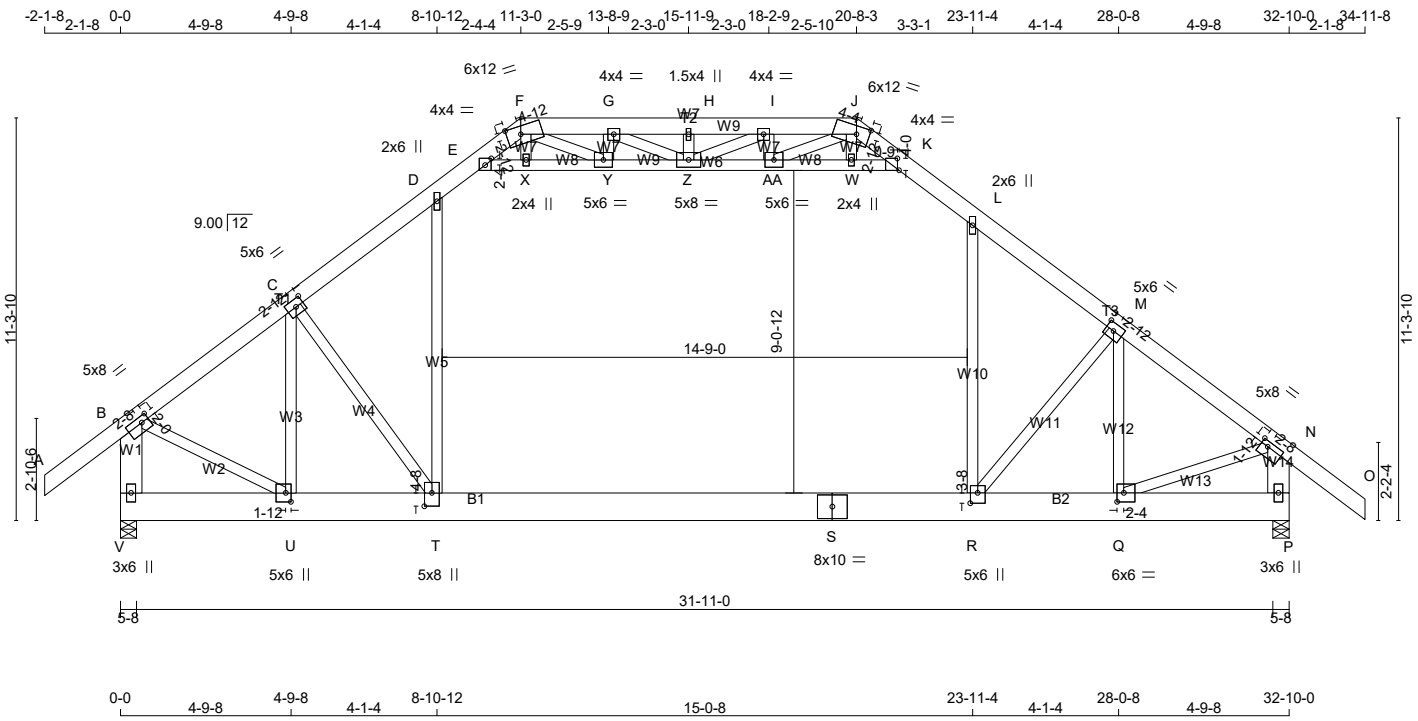

TOTAL WEIGHT = 2 X 287 = 575 lb

[M]

LUMBER

N. L. G. A. RULES

CHORDS	SIZE		LUMBER	DESCR.
A - F	2x6	DRY	1650F 1.5E	SPF
J - O	2x6	DRY	1650F 1.5E	SPF
F - J	2x6	DRY	1650F 1.5E	SPF
V - B	2x8	DRY	1950F 1.7E	DF
P - N	2x8	DRY	1950F 1.7E	DF
V - S	2x10	DRY	SS	DF

DIMENSIONS, SUPPORTS AND LOADINGS SPECIFIED BY FABRICATOR TO BE VERIFIED BY BUILDING DESIGNER

BEARINGS

JT	FACTORED GROSS REACTION VERT	HORZ	MAXIMUM FACTORED GROSS REACTION DOWN	HORZ	UPLIFT	INPUT BRG	REQRD BRG
V	3287	0	3483	-292	-283	5-8	3-12
P	3282	0	3524	0	-289	5-8	3-13

PROVIDE ANCHORAGE AT BEARING JOINT V FOR 283 LBS FACTORED UPLIFT
PROVIDE ANCHORAGE AT BEARING JOINT P FOR 289 LBS FACTORED UPLIFT

PROVIDE FOR 292 LBS FACTORED HORIZONTAL REACTION AT JOINT V

UNFACTORED REACTIONS

JT	1ST LCASE COMBINED	MAX./MIN. COMPONENT REACTIONS SNOW	LIVE	PERM.LIVE	WIND	DEAD	SOIL
V	2464	1562 / 0	603 / 0	0 / 0	187 / -450	429 / 0	0 / 0
P	2459	1593 / 0	599 / 0	0 / 0	121 / -454	429 / 0	0 / 0
HORIZONTAL REACTIONS							
V	---	0 / 0	0 / 0	0 / 0	201 / -208	0 / 0	0 /0

BEARING MATERIAL TO BE SPF NO.2 OR BETTER AT JOINT(S) V, P

BRACING

MAX. UNBRACED TOP CHORD LENGTH = 4.79 FT.
MAX. UNBRACED BOTTOM CHORD LENGTH = 6.25 FT OR RIGID CEILING DIRECTLY APPLIED.

MAX. UNBRACED INTERIOR CHORD LENGTH = 4.84 FT OR RIGID SHEATHING TO ATTIC FLOOR AND CEILING.

ALL PITCH BREAKS AND PERIMETER CORNER JOINTS MUST BE LATERALLY RESTRAINED.

DESIGN CRITERIA

SPECIFIED LOADS:

TOP CH.	LL	=	57.5	PSF
	DL	=	5.0	PSF
BOT CH.	LL	=	10.0	PSF
	DL	=	7.0	PSF
TOTAL LOAD		=	79.5	PSF
ATTIC FLOOR		=	40.0	PSF
	DL	=	10.0	PSF
CEILING	DL	=	5.0	PSF

SPACING = 16.0 IN. C/C

LOADING IN FLAT SECTION BASED ON A SLOPE OF 9.00/12

THIS TRUSS IS DESIGNED FOR COMMERCIAL OR INDUSTRIAL BUILDING REQUIREMENTS OF PART 4, NBCC 2015

THIS DESIGN COMPLIES WITH:
- PART 4 OF BCBC 2018 , ABC 2019
- PART 4 OF OBC 2012 (2019 AMENDMENT)
- CSA 086-14
- TPIC 2014

DESIGN ASSUMPTIONS
- SLOPE REDUCTION FACTOR USED

CONTINUED ON PAGE 2

JOB NAME	TRUSS NAME	QUANTITY	PLY	JOB DESC. Woodcreek / Adkins	DRWG NO.
211770	C2	2	1	TRUSS DESC.	

KAMLOOPS TRUSS LTD., Kamloops, BC V2H 1G3

Version 8.420 S Mar 22 2021 MiTek Industries, Inc. Thu May 27 07:06:01 2021 Page 2

ID:X2qvwXGfFYBXzZFl6ldjmRzCaiR-K1gem3os3GbUdmVqNoksVa9gzVdkbrpnbKT2tVzCLWc

BS-DRY
BS-DRY
EXCEPT

DRY: SEASONED LUMBER.

PLATES (table is in inches)

JT	TYPE	PLATES	W	LEN	Y	X
B	TMVW-t	MT20	5.0	8.0	2.00	2.50
C	TMWW-t	MT20	5.0	6.0	2.50	2.75
D	TMW+w	MT20	2.0	6.0		
E	TMW+w	MT20	4.0	4.0	2.00	2.25
F	TTWW-m	MT20	6.0	12.0	2.75	4.75
G	TMWW-t	MT20	4.0	4.0		
H	TMW+w	MT20	1.5	4.0		
I	TMWW-t	MT20	4.0	4.0		
J	TTWW-m	MT20	6.0	12.0	2.75	4.25
K	TMW+w	MT20	4.0	4.0	0.50	4.00
L	TMW+w	MT20	2.0	6.0		
M	TMWW-t	MT20	5.0	6.0	2.50	2.75
N	TMVW-t	MT20	5.0	8.0	1.75	2.50
P	BMV1+p	MT20	3.0	6.0		
Q	BMWW-t	MT20	6.0	6.0	3.00	2.25
R	BMWW+t	MT20	5.0	6.0	3.50	2.50
S	BS-t	MT20	8.0	10.0		
T	BMWW+t	MT20	5.0	8.0	4.50	2.50
U	BMWW+t	MT20	5.0	6.0	3.00	1.75
V	BMV1+p	MT20	3.0	6.0		
W	WMW+w	MT20	2.0	4.0		
X	WMW+w	MT20	2.0	4.0		
Y	WMWW-t	MT20	5.0	6.0		
Z	WMWWW-t	MT20	5.0	8.0		
AA	WMWW-t	MT20	5.0	6.0		

LOADING

TOTAL LOAD CASES: (18)

C H O R D S

MEMB. FR-TO	MAX. FACTORED FORCE (LBS)	FACTORED VERT. LOAD (PLF) FROM	TO	LC1 MAX CSI (LC)	MAX. UNBRAC LENGTH
A- B	0 / 102	-123.3	-123.3	0.19 (2)	10.00
B- C	-2826 / 264	-123.3	-123.3	0.23 (2)	5.34
C- D	-3244 / 274	-123.3	-123.3	0.28 (5)	5.10
D- E	-2585 / 308	-131.6	-131.6	0.47 (3)	5.21
E- F	-1308 / 226	-123.3	-123.3	0.46 (3)	6.25
J- K	-1317 / 230	-123.3	-123.3	0.54 (5)	6.25
K- L	-2643 / 297	-131.6	-131.6	0.55 (5)	5.10
L- M	-3323 / 252	-123.3	-123.3	0.45 (6)	4.79
M- N	-3279 / 286	-123.3	-123.3	0.26 (3)	5.00
N- O	0 / 102	-123.3	-123.3	0.19 (3)	10.00
F- G	-2052 / 373	-123.3	-123.3	0.05 (2)	6.24
G- H	-2288 / 401	-123.3	-123.3	0.06 (2)	6.01
H- I	-2288 / 401	-123.3	-123.3	0.06 (3)	6.01
I- J	-2094 / 373	-123.3	-123.3	0.05 (3)	6.21
V- B	-3395 / 307	0.0	0.0	0.13 (2)	7.55
P- N	-3451 / 317	0.0	0.0	0.11 (3)	7.51
V- U	-258 / 281	-25.0	-25.0	0.13 (3)	6.25
U- T	-206 / 2305	-25.0	-25.0	0.79 (3)	6.25
T- S	-21 / 2527	-81.7	-81.7	0.83 (3)	6.25
S- R	-21 / 2527	-81.7	-81.7	0.83 (3)	6.25
R- Q	-91 / 2672	-25.0	-25.0	0.59 (2)	6.25
Q- P	-6 / 17	-25.0	-25.0	0.11 (2)	10.00
E- X	-2242 / 211	-21.7	-21.7	0.11 (3)	5.04
X- Y	-2224 / 211	-21.7	-21.7	0.11 (3)	5.05
Y- Z	-1464 / 334	-21.7	-21.7	0.06 (9)	6.04
Z-AA	-1553 / 273	-21.7	-21.7	0.06 (10)	5.91
AA- W	-2448 / 182	-21.7	-21.7	0.12 (4)	4.85
W- K	-2468 / 182	-21.7	-21.7	0.11 (4)	4.84

W E B S

MEMB. FR-TO	MAX. FACTORED FORCE (LBS)	MAX CSI (LC)
T- D	0 / 1025	0.12 (6)
R- L	0 / 1066	0.12 (5)
U- C	-1702 / 101	0.46 (3)
C- T	-244 / 1341	0.16 (3)
B- U	-91 / 2534	0.29 (2)
Q- M	-1260 / 75	0.25 (2)
R- M	-587 / 858	0.21 (10)
Q- N	-113 / 2803	0.33 (3)
W- J	0 / 147	0.02 (5)
X- F	0 / 141	0.02 (6)
Y- G	-611 / 119	0.04 (3)
Z- H	-282 / 60	0.02 (2)
AA- I	-637 / 115	0.04 (2)
F- Y	-247 / 1536	0.18 (3)
G- Z	-86 / 490	0.05 (3)
Z- I	-78 / 532	0.06 (2)
AA- J	-238 / 1609	0.19 (2)

TRUSS HAS BEEN CHECKED FOR UNBALANCED LOADING
AS PER NBCC 4.1.6.2.(8)

WIND LOAD APPLIED IS DERIVED FROM REFERENCE VELOCITY PRESSURE OF { 7.5} PSF AT {40-0-0} FT-IN-SX REFERENCE HEIGHT ABOVE GRADE AND USING EXTERNAL PEAK COEFFICIENTS, CpCg, BASED ON THE {MAIN WIND FORCE RESISTING SYSTEM}.INTERNAL WIND PRESSURE IS BASED ON DESIGN {CATEGORY 2}. BUILDING MAY BE LOCATED ON {OPEN TERRAIN}, AND TRUSS IS DESIGNED TO BE LOCATED AT LEAST {0-0} FT-IN-SX AWAY FROM EAVE.TRUSS UPLIFT IS BASED ON TOP AND BOTTOM CHORD DEAD LOADS OF 5.0 PSF AND 5.0 PSF RESPECTIVELY.

(66 % OF 83.6 P.S.F. G.S.L. PLUS 2.1 P.S.F. RAIN LOAD) TIMES IMPORTANCE FACTOR EQUALS 57.5 P.S.F. SPECIFIED ROOF LIVE LOAD

ALLOWABLE DEFL.(LL)= L/240 (1.64")
CALCULATED VERT. DEFL.(LL) = L/ 999 (0.28")
ALLOWABLE DEFL.(TL)= L/180 (2.19")
CALCULATED VERT. DEFL.(TL) = L/ 999 (0.34")

CSI: TC=0.55/1.00 (K-L:5) , BC=0.83/1.00 (R-T:3) , WB=0.46/1.00 (C-U:3) , SSI=0.54/1.00 (D-E:4)

DOL LUMBER=1.00 NAIL=1.00 LS BEND=1.10 COMP=1.10 SHEAR=1.10 TENS= 1.10

SNOW LOAD IMPORTANCE FACTOR = 1.00
WIND LOAD IMPORTANCE FACTOR = 1.00
LIVE LOAD IMPORTANCE FACTOR = 1.00
COMPANION LIVE LOAD FACTOR = 1.00

AUTOSOLVE HEELS OFF

TRUSS PLATE MANUFACTURER IS NOT RESPONSIBLE FOR QUALITY CONTROL IN THE TRUSS MANUFACTURING PLANT .

NAIL VALUES

PLATE	GRIP(DRY) (PSI) MAX	MIN	SHEAR (PLI) MAX	MIN	SECTION (PLI) MAX	MIN
MT20	650	371	1747	788	1987	1873

PLATE PLACEMENT TOL. = 0.250 inches

PLATE ROTATION TOL. = 5.0 Deg.

JSI GRIP= 0.90 (U) (INPUT = 0.90)
JSI METAL= 0.89 (S) (INPUT = 1.00)

JOB NAME	TRUSS NAME	QUANTITY	PLY	JOB DESC. Woodcreek / Adkins	DRWG NO.
211770	C3	1	1	TRUSS DESC.	

KAMLOOPS TRUSS LTD., Kamloops, BC V2H 1G3

Version 8.420 S Mar 22 2021 MiTek Industries, Inc. Thu May 27 07:06:04 2021 Page 1

ID:X2qvwXGfFYBXzZFI6ldjmRzCaiR-lcLnP5qlMBz2UDEP2wHZ7DnBDjeRoCZEHlhjUqzCLWn

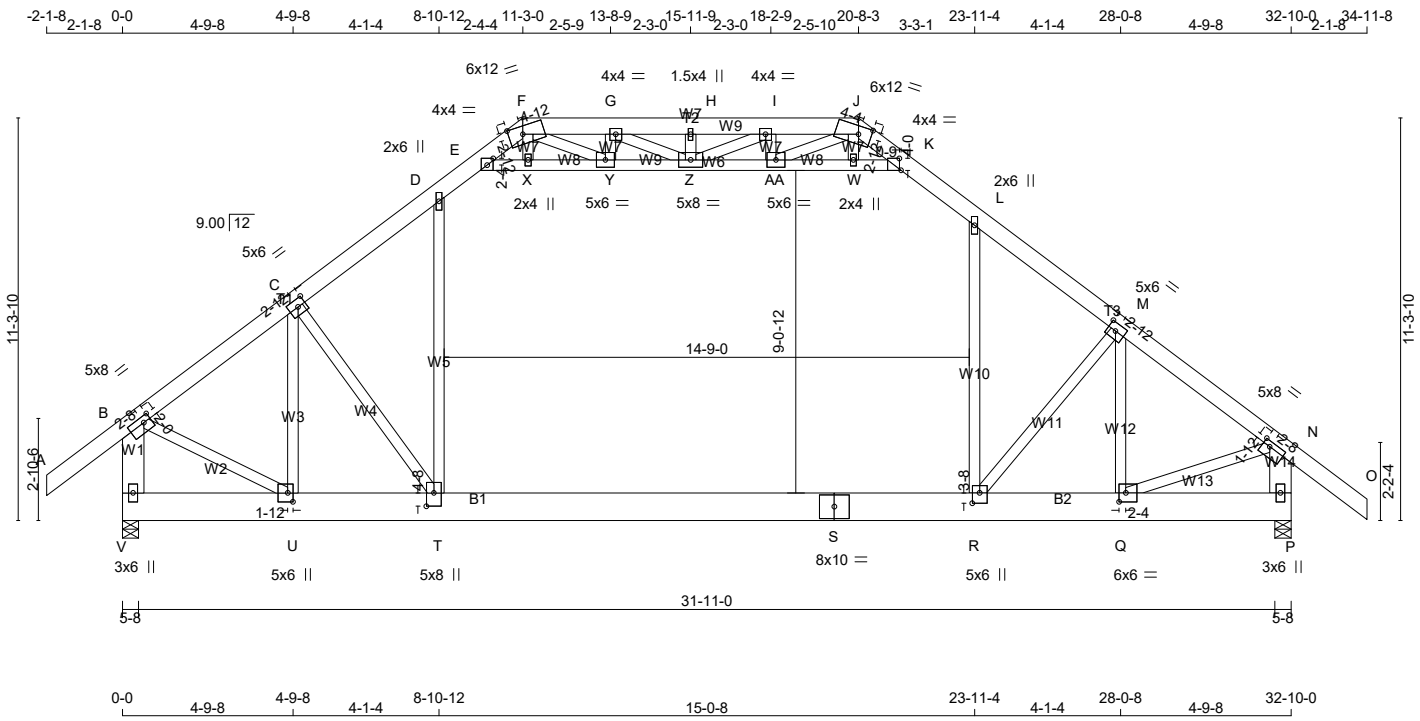

TOTAL WEIGHT = 287 lb

LUMBER

N. L. G. A. RULES

CHORDS	SIZE		LUMBER	DESCR.
A - F	2x6	DRY	1650F 1.5E	SPF
J - O	2x6	DRY	1650F 1.5E	SPF
F - J	2x6	DRY	1650F 1.5E	SPF
V - B	2x8	DRY	1950F 1.7E	DF
P - N	2x8	DRY	1950F 1.7E	DF
V - S	2x10	DRY	SS	DF

DIMENSIONS, SUPPORTS AND LOADINGS SPECIFIED BY FABRICATOR TO BE VERIFIED BY BUILDING DESIGNER

BEARINGS

JT	FACTORED GROSS REACTION VERT	HORZ	MAXIMUM FACTORED GROSS REACTION DOWN	HORZ	UPLIFT	INPUT BRG	REQRD BRG
V	3287	0	3483	-292	-283	5-8	3-12
P	3282	0	3524	0	-289	5-8	3-13

PROVIDE ANCHORAGE AT BEARING JOINT V FOR 283 LBS FACTORED UPLIFT
PROVIDE ANCHORAGE AT BEARING JOINT P FOR 289 LBS FACTORED UPLIFT

PROVIDE FOR 292 LBS FACTORED HORIZONTAL REACTION AT JOINT V

UNFACTORED REACTIONS

JT	1ST LCASE COMBINED	MAX./MIN. COMPONENT REACTIONS SNOW	LIVE	PERM.LIVE	WIND	DEAD	SOIL
V	2464	1562 / 0	603 / 0	0 / 0	187 / -450	429 / 0	0 / 0
P	2459	1593 / 0	599 / 0	0 / 0	121 / -454	429 / 0	0 / 0
HORIZONTAL REACTIONS							
V	---	0 / 0	0 / 0	0 / 0	201 / -208	0 / 0	0 /0

BEARING MATERIAL TO BE SPF NO.2 OR BETTER AT JOINT(S) V, P

BRACING

MAX. UNBRACED TOP CHORD LENGTH = 4.79 FT.
MAX. UNBRACED BOTTOM CHORD LENGTH = 6.25 FT OR RIGID CEILING DIRECTLY APPLIED.

MAX. UNBRACED INTERIOR CHORD LENGTH = 4.84 FT OR RIGID SHEATHING TO ATTIC FLOOR AND CEILING.

ALL PITCH BREAKS AND PERIMETER CORNER JOINTS MUST BE LATERALLY RESTRAINED.

[M]

DESIGN CRITERIA

SPECIFIED LOADS:

TOP CH.	LL	=	57.5	PSF
	DL	=	5.0	PSF
BOT CH.	LL	=	10.0	PSF
	DL	=	7.0	PSF
TOTAL LOAD		=	79.5	PSF
ATTIC FLOOR		=	40.0	PSF
	DL	=	10.0	PSF
CEILING	DL	=	5.0	PSF

SPACING = 16.0 IN. C/C

LOADING IN FLAT SECTION BASED ON A SLOPE OF 9.00/12

THIS TRUSS IS DESIGNED FOR COMMERCIAL OR INDUSTRIAL BUILDING REQUIREMENTS OF PART 4, NBCC 2015

THIS DESIGN COMPLIES WITH:
- PART 4 OF BCBC 2018 , ABC 2019
- PART 4 OF OBC 2012 (2019 AMENDMENT)
- CSA 086-14
- TPIC 2014

DESIGN ASSUMPTIONS
- SLOPE REDUCTION FACTOR USED

CONTINUED ON PAGE 2

JOB NAME	TRUSS NAME	QUANTITY	PLY	JOB DESC. Woodcreek / Adkins	DRWG NO.
211770	C3	1	1	TRUSS DESC.	

KAMLOOPS TRUSS LTD., Kamloops, BC V2H 1G3

Version 8.420 S Mar 22 2021 MiTek Industries, Inc. Thu May 27 07:06:04 2021 Page 2

ID:X2qvwXGfFYBXzZFI6ldjmRzCaiR-lcLnP5qlMBz2UDEP2wHZ7DnBDjeRoCZEHlhjUqzCLWn

BS-DRY
BS-DRY
EXCEPT

DRY: SEASONED LUMBER.

PLATES (table is in inches)

JT	TYPE	PLATES	W	LEN	Y	X
B	TMVW-t	MT20	5.0	8.0	2.00	2.50
C	TMWW-t	MT20	5.0	6.0	2.50	2.75
D	TMW+w	MT20	2.0	6.0		
E	TMW+w	MT20	4.0	4.0	2.00	2.25
F	TTWW-m	MT20	6.0	12.0	2.75	4.75
G	TMWW-t	MT20	4.0	4.0		
H	TMW+w	MT20	1.5	4.0		
I	TMWW-t	MT20	4.0	4.0		
J	TTWW-m	MT20	6.0	12.0	2.75	4.25
K	TMW+w	MT20	4.0	4.0	0.50	4.00
L	TMW+w	MT20	2.0	6.0		
M	TMWW-t	MT20	5.0	6.0	2.50	2.75
N	TMVW-t	MT20	5.0	8.0	1.75	2.50
P	BMV1+p	MT20	3.0	6.0		
Q	BMWW-t	MT20	6.0	6.0	3.00	2.25
R	BMWW+t	MT20	5.0	6.0	3.50	2.50
S	BS-t	MT20	8.0	10.0		
T	BMWW+t	MT20	5.0	8.0	4.50	2.50
U	BMWW+t	MT20	5.0	6.0	3.00	1.75
V	BMV1+p	MT20	3.0	6.0		
W	WMW+w	MT20	2.0	4.0		
X	WMW+w	MT20	2.0	4.0		
Y	WMWW-t	MT20	5.0	6.0		
Z	WMWWW-t	MT20	5.0	8.0		
AA	WMWW-t	MT20	5.0	6.0		

LOADING

TOTAL LOAD CASES: (18)

C H O R D S

MEMB. FR-TO	MAX. FACTORED FORCE (LBS)	FROM	FACTORED VERT. LOAD (PLF) TO	LC1	MAX CSI (LC)	MAX. UNBRAC LENGTH
A- B	0 / 102	-123.3	-123.3	0.19 (2)	10.00	
B- C	-2826 / 264	-123.3	-123.3	0.23 (2)	5.34	
C- D	-3244 / 274	-123.3	-123.3	0.28 (5)	5.10	
D- E	-2585 / 308	-131.6	-131.6	0.47 (3)	5.21	
E- F	-1308 / 226	-123.3	-123.3	0.46 (3)	6.25	
J- K	-1317 / 230	-123.3	-123.3	0.54 (5)	6.25	
K- L	-2643 / 297	-131.6	-131.6	0.55 (5)	5.10	
L- M	-3323 / 252	-123.3	-123.3	0.45 (6)	4.79	
M- N	-3279 / 286	-123.3	-123.3	0.26 (3)	5.00	
N- O	0 / 102	-123.3	-123.3	0.19 (3)	10.00	
F- G	-2052 / 373	-123.3	-123.3	0.05 (2)	6.24	
G- H	-2288 / 401	-123.3	-123.3	0.06 (2)	6.01	
H- I	-2288 / 401	-123.3	-123.3	0.06 (3)	6.01	
I- J	-2094 / 373	-123.3	-123.3	0.05 (3)	6.21	
V- B	-3395 / 307	0.0	0.0	0.13 (2)	7.55	
P- N	-3451 / 317	0.0	0.0	0.11 (3)	7.51	
V- U	-258 / 281	-25.0	-25.0	0.13 (3)	6.25	
U- T	-206 / 2305	-25.0	-25.0	0.79 (3)	6.25	
T- S	-21 / 2527	-81.7	-81.7	0.83 (3)	6.25	
S- R	-21 / 2527	-81.7	-81.7	0.83 (3)	6.25	
R- Q	-91 / 2672	-25.0	-25.0	0.59 (2)	6.25	
Q- P	-6 / 17	-25.0	-25.0	0.11 (2)	10.00	
E- X	-2242 / 211	-21.7	-21.7	0.11 (3)	5.04	
X- Y	-2224 / 211	-21.7	-21.7	0.11 (3)	5.05	
Y- Z	-1464 / 334	-21.7	-21.7	0.06 (9)	6.04	
Z-AA	-1553 / 273	-21.7	-21.7	0.06 (10)	5.91	
AA- W	-2448 / 182	-21.7	-21.7	0.12 (4)	4.85	
W- K	-2468 / 182	-21.7	-21.7	0.11 (4)	4.84	

W E B S

MEMB. FR-TO	MAX. FACTORED FORCE (LBS)	MAX CSI (LC)
T- D	0 / 1025	0.12 (6)
R- L	0 / 1066	0.12 (5)
U- C	-1702 / 101	0.46 (3)
C- T	-244 / 1341	0.16 (3)
B- U	-91 / 2534	0.29 (2)
Q- M	-1260 / 75	0.25 (2)
R- M	-587 / 858	0.21 (10)
Q- N	-113 / 2803	0.33 (3)
W- J	0 / 147	0.02 (5)
X- F	0 / 141	0.02 (6)
Y- G	-611 / 119	0.04 (3)
Z- H	-282 / 60	0.02 (2)
AA- I	-637 / 115	0.04 (2)
F- Y	-247 / 1536	0.18 (3)
G- Z	-86 / 490	0.05 (3)
Z- I	-78 / 532	0.06 (2)
AA- J	-238 / 1609	0.19 (2)

TRUSS HAS BEEN CHECKED FOR UNBALANCED LOADING
AS PER NBCC 4.1.6.2.(8)

WIND LOAD APPLIED IS DERIVED FROM REFERENCE VELOCITY PRESSURE OF { 7.5} PSF AT {40-0-0} FT-IN-SX REFERENCE HEIGHT ABOVE GRADE AND USING EXTERNAL PEAK COEFFICIENTS, CpCg, BASED ON THE {MAIN WIND FORCE RESISTING SYSTEM}.INTERNAL WIND PRESSURE IS BASED ON DESIGN {CATEGORY 2}. BUILDING MAY BE LOCATED ON {OPEN TERRAIN}, AND TRUSS IS DESIGNED TO BE LOCATED AT LEAST {0-0} FT-IN-SX AWAY FROM EAVE.TRUSS UPLIFT IS BASED ON TOP AND BOTTOM CHORD DEAD LOADS OF 5.0 PSF AND 5.0 PSF RESPECTIVELY.

(66 % OF 83.6 P.S.F. G.S.L. PLUS 2.1 P.S.F. RAIN LOAD) TIMES IMPORTANCE FACTOR EQUALS 57.5 P.S.F. SPECIFIED ROOF LIVE LOAD

ALLOWABLE DEFL.(LL)= L/240 (1.64")
CALCULATED VERT. DEFL.(LL) = L/ 999 (0.28")
ALLOWABLE DEFL.(TL)= L/180 (2.19")
CALCULATED VERT. DEFL.(TL) = L/ 999 (0.34")

CSI: TC=0.55/1.00 (K-L:5) , BC=0.83/1.00 (R-T:3) , WB=0.46/1.00 (C-U:3) , SSI=0.54/1.00 (D-E:4)

DOL LUMBER=1.00 NAIL=1.00 LS BEND=1.10 COMP=1.10 SHEAR=1.10 TENS= 1.10

SNOW LOAD IMPORTANCE FACTOR = 1.00
WIND LOAD IMPORTANCE FACTOR = 1.00
LIVE LOAD IMPORTANCE FACTOR = 1.00
COMPANION LIVE LOAD FACTOR = 1.00

AUTOSOLVE HEELS OFF

TRUSS PLATE MANUFACTURER IS NOT RESPONSIBLE FOR QUALITY CONTROL IN THE TRUSS MANUFACTURING PLANT .

NAIL VALUES

PLATE	GRIP(DRY) (PSI) MAX	MIN	SHEAR (PLI) MAX	MIN	SECTION (PLI) MAX	MIN
MT20	650	371	1747	788	1987	1873

PLATE PLACEMENT TOL. = 0.250 inches

PLATE ROTATION TOL. = 5.0 Deg.

JSI GRIP= 0.90 (U) (INPUT = 0.90)
JSI METAL= 0.89 (S) (INPUT = 1.00)

JOB NAME	TRUSS NAME	QUANTITY	PLY	JOB DESC. Woodcreek / Adkins	DRWG NO.
211770	C4	1	1	TRUSS DESC.	

KAMLOOPS TRUSS LTD., Kamloops, BC V2H 1G3

Version 8.420 S Mar 22 2021 MiTek Industries, Inc. Thu May 27 07:06:06 2021 Page 1

ID:X2qvwXGfFYBXzZFl6IdjmRzCaiR-h?TXqns?upDmkXOn9LJ1CesXiWKvG63WlcApYizCLWI

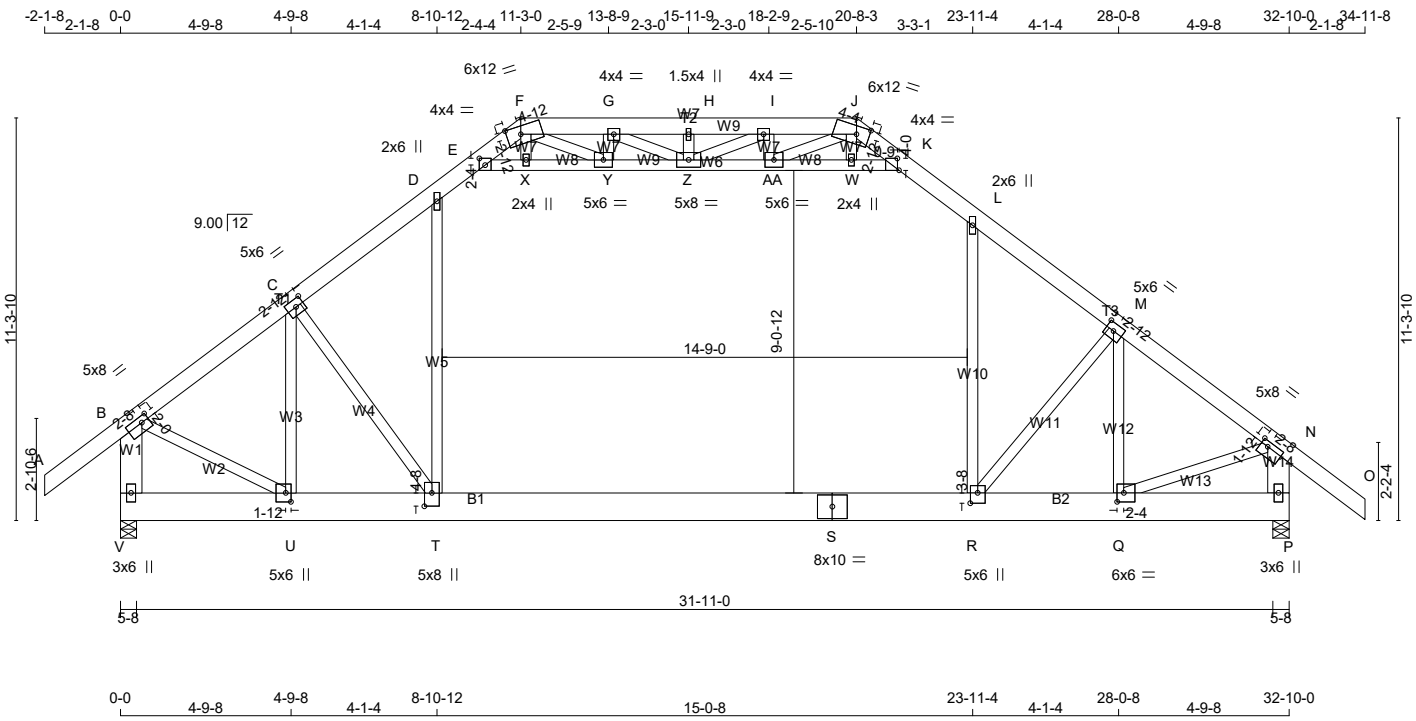

TOTAL WEIGHT = 287 lb

LUMBER

N. L. G. A. RULES

CHORDS	SIZE		LUMBER	DESCR.
A - F	2x6	DRY	1650F 1.5E	SPF
J - O	2x6	DRY	1650F 1.5E	SPF
F - J	2x6	DRY	1650F 1.5E	SPF
V - B	2x8	DRY	1950F 1.7E	DF
P - N	2x8	DRY	1950F 1.7E	DF
V - S	2x10	DRY	SS	DF

DIMENSIONS, SUPPORTS AND LOADINGS SPECIFIED BY FABRICATOR TO BE VERIFIED BY BUILDING DESIGNER

BEARINGS

JT	FACTORED GROSS REACTION VERT	HORZ	MAXIMUM FACTORED GROSS REACTION DOWN	HORZ	UPLIFT	INPUT BRG	REQRD BRG
V	3287	0	3483	-292	-283	5-8	3-12
P	3282	0	3524	0	-289	5-8	3-13

PROVIDE ANCHORAGE AT BEARING JOINT V FOR 283 LBS FACTORED UPLIFT
PROVIDE ANCHORAGE AT BEARING JOINT P FOR 289 LBS FACTORED UPLIFT

PROVIDE FOR 292 LBS FACTORED HORIZONTAL REACTION AT JOINT V

UNFACTORED REACTIONS

JT	1ST LCASE COMBINED	MAX./MIN. COMPONENT REACTIONS SNOW	LIVE	PERM.LIVE	WIND	DEAD	SOIL
V	2464	1562 / 0	603 / 0	0 / 0	187 / -450	429 / 0	0 / 0
P	2459	1593 / 0	599 / 0	0 / 0	121 / -454	429 / 0	0 / 0
HORIZONTAL REACTIONS							
V	---	0 / 0	0 / 0	0 / 0	201 / -208	0 / 0	0 /0

BEARING MATERIAL TO BE SPF NO.2 OR BETTER AT JOINT(S) V, P

BRACING

MAX. UNBRACED TOP CHORD LENGTH = 4.79 FT.
MAX. UNBRACED BOTTOM CHORD LENGTH = 6.25 FT OR RIGID CEILING DIRECTLY APPLIED.

MAX. UNBRACED INTERIOR CHORD LENGTH = 4.84 FT OR RIGID SHEATHING TO ATTIC FLOOR AND CEILING.

ALL PITCH BREAKS AND PERIMETER CORNER JOINTS MUST BE LATERALLY RESTRAINED.

[M]

DESIGN CRITERIA

SPECIFIED LOADS:

TOP CH.	LL	=	57.5	PSF
	DL	=	5.0	PSF
BOT CH.	LL	=	10.0	PSF
	DL	=	7.0	PSF
TOTAL LOAD		=	79.5	PSF
ATTIC FLOOR		=	40.0	PSF
	DL	=	10.0	PSF
CEILING	DL	=	5.0	PSF

SPACING = 16.0 IN. C/C

LOADING IN FLAT SECTION BASED ON A SLOPE OF 9.00/12

THIS TRUSS IS DESIGNED FOR COMMERCIAL OR INDUSTRIAL BUILDING REQUIREMENTS OF PART 4, NBCC 2015

THIS DESIGN COMPLIES WITH:
- PART 4 OF BCBC 2018 , ABC 2019
- PART 4 OF OBC 2012 (2019 AMENDMENT)
- CSA 086-14
- TPIC 2014

DESIGN ASSUMPTIONS
- SLOPE REDUCTION FACTOR USED

CONTINUED ON PAGE 2

JOB NAME	TRUSS NAME	QUANTITY	PLY	JOB DESC. Woodcreek / Adkins	DRWG NO.
211770	C4	1	1	TRUSS DESC.	

KAMLOOPS TRUSS LTD., Kamloops, BC V2H 1G3

ID:X2qvwXGfFYBXzZFl6ldjmRzCaiR-h?TXqns?upDmkXOn9LJ1CesXiWKvG63WlcApYizCLWI

BS: DRY
BS: DRY
EXCEPT

DRY: SEASONED LUMBER.

PLATES (table is in inches)

JT	TYPE	PLATES	W	LEN	Y	X
B	TMVW-t	MT20	5.0	8.0	2.00	2.50
C	TMWW-t	MT20	5.0	6.0	2.50	2.75
D	TMW+w	MT20	2.0	6.0		
E	TMW+w	MT20	4.0	4.0	2.00	2.25
F	TTWW-m	MT20	6.0	12.0	2.75	4.75
G	TMWW-t	MT20	4.0	4.0		
H	TMW+w	MT20	1.5	4.0		
I	TMWW-t	MT20	4.0	4.0		
J	TTWW-m	MT20	6.0	12.0	2.75	4.25
K	TMW+w	MT20	4.0	4.0	0.50	4.00
L	TMW+w	MT20	2.0	6.0		
M	TMWW-t	MT20	5.0	6.0	2.50	2.75
N	TMVW-t	MT20	5.0	8.0	1.75	2.50
P	BMV1+p	MT20	3.0	6.0		
Q	BMWW-t	MT20	6.0	6.0	3.00	2.25
R	BMWW+t	MT20	5.0	6.0	3.50	2.50
S	BS-t	MT20	8.0	10.0		
T	BMWW+t	MT20	5.0	8.0	4.50	2.50
U	BMWW+t	MT20	5.0	6.0	3.00	1.75
V	BMV1+p	MT20	3.0	6.0		
W	WMW+w	MT20	2.0	4.0		
X	WMW+w	MT20	2.0	4.0		
Y	WMWW-t	MT20	5.0	6.0		
Z	WMWWW-t	MT20	5.0	8.0		
AA	WMWW-t	MT20	5.0	6.0		

LOADING

TOTAL LOAD CASES: (18)

C H O R D S

MEMB. FR-TO	MAX. FACTORED FORCE (LBS)	FACTORED VERT. LOAD (PLF) FROM	TO	LC1 MAX CSI (LC)	MAX. UNBRAC LENGTH
A- B	0 / 102	-123.3	-123.3	0.19 (2)	10.00
B- C	-2826 / 264	-123.3	-123.3	0.23 (2)	5.34
C- D	-3244 / 274	-123.3	-123.3	0.28 (5)	5.10
D- E	-2585 / 308	-131.6	-131.6	0.47 (3)	5.21
E- F	-1308 / 226	-123.3	-123.3	0.46 (3)	6.25
J- K	-1317 / 230	-123.3	-123.3	0.54 (5)	6.25
K- L	-2643 / 297	-131.6	-131.6	0.55 (5)	5.10
L- M	-3323 / 252	-123.3	-123.3	0.45 (6)	4.79
M- N	-3279 / 286	-123.3	-123.3	0.26 (3)	5.00
N- O	0 / 102	-123.3	-123.3	0.19 (3)	10.00
F- G	-2052 / 373	-123.3	-123.3	0.05 (2)	6.24
G- H	-2288 / 401	-123.3	-123.3	0.06 (2)	6.01
H- I	-2288 / 401	-123.3	-123.3	0.06 (3)	6.01
I- J	-2094 / 373	-123.3	-123.3	0.05 (3)	6.21
V- B	-3395 / 307	0.0	0.0	0.13 (2)	7.55
P- N	-3451 / 317	0.0	0.0	0.11 (3)	7.51
V- U	-258 / 281	-25.0	-25.0	0.13 (3)	6.25
U- T	-206 / 2305	-25.0	-25.0	0.79 (3)	6.25
T- S	-21 / 2527	-81.7	-81.7	0.83 (3)	6.25
S- R	-21 / 2527	-81.7	-81.7	0.83 (3)	6.25
R- Q	-91 / 2672	-25.0	-25.0	0.59 (2)	6.25
Q- P	-6 / 17	-25.0	-25.0	0.11 (2)	10.00
E- X	-2242 / 211	-21.7	-21.7	0.11 (3)	5.04
X- Y	-2224 / 211	-21.7	-21.7	0.11 (3)	5.05
Y- Z	-1464 / 334	-21.7	-21.7	0.06 (9)	6.04
Z-AA	-1553 / 273	-21.7	-21.7	0.06 (10)	5.91
AA- W	-2448 / 182	-21.7	-21.7	0.12 (4)	4.85
W- K	-2468 / 182	-21.7	-21.7	0.11 (4)	4.84

W E B S

MEMB. FR-TO	MAX. FACTORED FORCE (LBS)	MAX CSI (LC)
T- D	0 / 1025	0.12 (6)
R- L	0 / 1066	0.12 (5)
U- C	-1702 / 101	0.46 (3)
C- T	-244 / 1341	0.16 (3)
B- U	-91 / 2534	0.29 (2)
Q- M	-1260 / 75	0.25 (2)
R- M	-587 / 858	0.21 (10)
Q- N	-113 / 2803	0.33 (3)
W- J	0 / 147	0.02 (5)
X- F	0 / 141	0.02 (6)
Y- G	-611 / 119	0.04 (3)
Z- H	-282 / 60	0.02 (2)
AA- I	-637 / 115	0.04 (2)
F- Y	-247 / 1536	0.18 (3)
G- Z	-86 / 490	0.05 (3)
Z- I	-78 / 532	0.06 (2)
AA- J	-238 / 1609	0.19 (2)

TRUSS HAS BEEN CHECKED FOR UNBALANCED LOADING
AS PER NBCC 4.1.6.2.(8)

WIND LOAD APPLIED IS DERIVED FROM REFERENCE VELOCITY PRESSURE OF { 7.5} PSF AT {40-0-0} FT-IN-SX REFERENCE HEIGHT ABOVE GRADE AND USING EXTERNAL PEAK COEFFICIENTS, CpCg, BASED ON THE {MAIN WIND FORCE RESISTING SYSTEM}.INTERNAL WIND PRESSURE IS BASED ON DESIGN {CATEGORY 2}. BUILDING MAY BE LOCATED ON {OPEN TERRAIN}, AND TRUSS IS DESIGNED TO BE LOCATED AT LEAST {0-0} FT-IN-SX AWAY FROM EAVE.TRUSS UPLIFT IS BASED ON TOP AND BOTTOM CHORD DEAD LOADS OF 5.0 PSF AND 5.0 PSF RESPECTIVELY.

(66 % OF 83.6 P.S.F. G.S.L. PLUS 2.1 P.S.F. RAIN LOAD) TIMES IMPORTANCE FACTOR EQUALS 57.5 P.S.F. SPECIFIED ROOF LIVE LOAD

ALLOWABLE DEFL.(LL)= L/240 (1.64")
CALCULATED VERT. DEFL.(LL) = L/ 999 (0.28")
ALLOWABLE DEFL.(TL)= L/180 (2.19")
CALCULATED VERT. DEFL.(TL) = L/ 999 (0.34")

CSI: TC=0.55/1.00 (K-L:5) , BC=0.83/1.00 (R-T:3) , WB=0.46/1.00 (C-U:3) , SSI=0.54/1.00 (D-E:4)

DOL LUMBER=1.00 NAIL=1.00 LS BEND=1.10 COMP=1.10 SHEAR=1.10 TENS= 1.10

SNOW LOAD IMPORTANCE FACTOR = 1.00
WIND LOAD IMPORTANCE FACTOR = 1.00
LIVE LOAD IMPORTANCE FACTOR = 1.00
COMPANION LIVE LOAD FACTOR = 1.00

AUTOSOLVE HEELS OFF

TRUSS PLATE MANUFACTURER IS NOT RESPONSIBLE FOR QUALITY CONTROL IN THE TRUSS MANUFACTURING PLANT .

NAIL VALUES

PLATE	GRIP(DRY) (PSI) MAX	MIN	SHEAR (PLI) MAX	MIN	SECTION (PLI) MAX	MIN
MT20	650	371	1747	788	1987	1873

PLATE PLACEMENT TOL. = 0.250 inches

PLATE ROTATION TOL. = 5.0 Deg.

JSI GRIP= 0.90 (U) (INPUT = 0.90)
JSI METAL= 0.89 (S) (INPUT = 1.00)

JOB NAME	TRUSS NAME	QUANTITY	PLY	JOB DESC. Woodcreek / Adkins	DRWG NO.
211770	C5	1	1	TRUSS DESC.	

KAMLOOPS TRUSS LTD., Kamloops, BC V2H 1G3

Version 8.420 S Mar 22 2021 MiTek Industries, Inc. Thu May 27 07:06:09 2021 Page 1

ID:X2qvwXGfFYBXzZFl6ldjmRzCaiR-5a9gSoutAkbLb_6MrTtkqGU5pkN1TSezRaPU91zCLWi

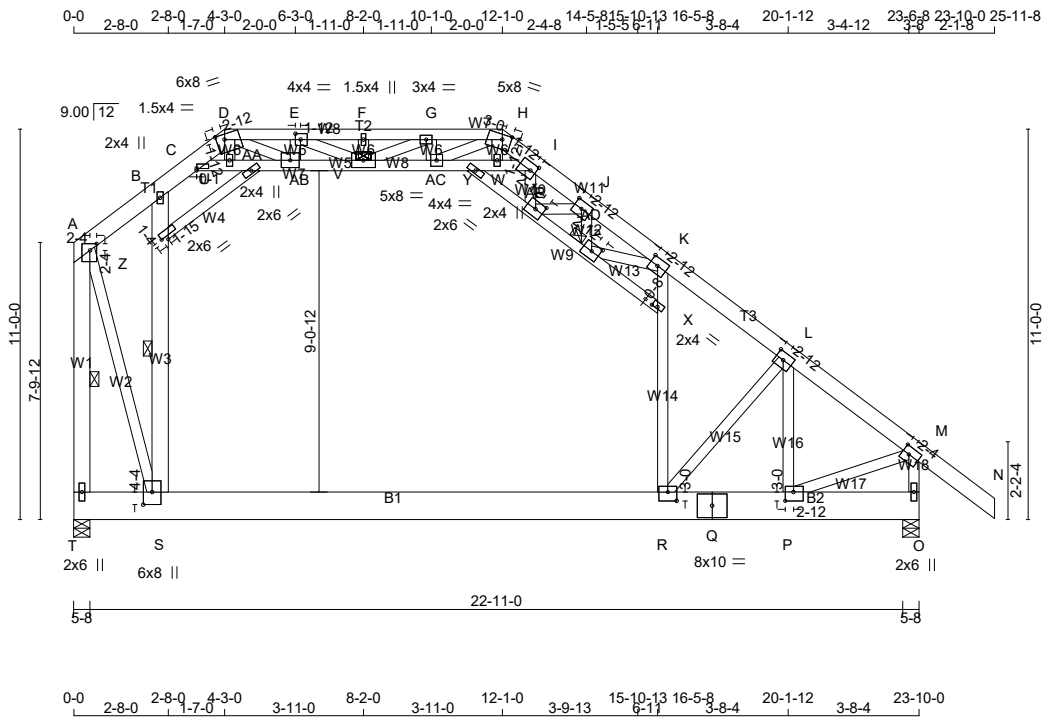

TOTAL WEIGHT = 241 lb [M]

LUMBER

N. L. G. A. RULES

CHORDS	SIZE		LUMBER	DESCR.
A - D	2x6	DRY	2400F 2.0E	DF
D - H	2x4	DRY	1650F 1.5E	SPF
H - N	2x6	DRY	2400F 2.0E	DF
T - A	2x6	DRY	1650F 1.5E	SPF
O - M	2x4	DRY	1650F 1.5E	SPF
T - Q	2x10	DRY	SS	DF

DIMENSIONS, SUPPORTS AND LOADINGS SPECIFIED BY FABRICATOR TO BE VERIFIED BY BUILDING DESIGNER

BEARINGS

	FACTORED GROSS REACTION		MAXIMUM FACTORED GROSS REACTION			INPUT BRG	REQRD BRG
JT	VERT	HORZ	DOWN	HORZ	UPLIFT	IN-SX	IN-SX
T	1767	0	1767	-334	-290	5-8	1-15
O	2046	0	2384	0	-319	5-8	3-2

PROVIDE ANCHORAGE AT BEARING JOINT T FOR 290 LBS FACTORED UPLIFT
PROVIDE ANCHORAGE AT BEARING JOINT O FOR 319 LBS FACTORED UPLIFT

PROVIDE FOR 334 LBS FACTORED HORIZONTAL REACTION AT JOINT T

UNFACTORED REACTIONS

	1ST LCASE	MAX./MIN. COMPONENT REACTIONS					
JT	COMBINED	SNOW	LIVE	PERM.LIVE	WIND	DEAD	SOIL
T	1263	913 / 0	159 / 0	0 / 0	83 / -309	191 / 0	0 / 0
O	1451	1312 / 0	159 / 0	0 / 0	103 / -340	206 / 0	0 / 0
HORIZONTAL REACTIONS							
T	---	0 / 0	0 / 0	0 / 0	177 / -238	0 / 0	0 /0

BEARING MATERIAL TO BE SPF NO.2 OR BETTER AT JOINT(S) T, O

DESIGN CRITERIA

SPECIFIED LOADS:

TOP CH.	LL	=	57.5	PSF
	DL	=	5.0	PSF
BOT CH.	LL	=	10.0	PSF
	DL	=	7.0	PSF
TOTAL LOAD		=	79.5	PSF

SPACING = 16.0 IN. C/C

LOADING IN FLAT SECTION BASED ON A SLOPE OF 9.00/12

THIS TRUSS IS DESIGNED FOR COMMERCIAL OR INDUSTRIAL BUILDING REQUIREMENTS OF PART 4, NBCC 2015

THIS DESIGN COMPLIES WITH:
- PART 4 OF BCBC 2018 , ABC 2019
- PART 4 OF OBC 2012 (2019 AMENDMENT)
- CSA 086-14
- TPIC 2014

DESIGN ASSUMPTIONS
- SLOPE REDUCTION FACTOR USED

(66 % OF 83.6 P.S.F. G.S.L. PLUS 2.1 P.S.F. RAIN LOAD) TIMES IMPORTANCE FACTOR EQUALS 57.5 P.S.F. SPECIFIED ROOF LIVE LOAD

ALLOWABLE DEFL.(LL)= L/240 (1.19")

CONTINUED ON PAGE 2

JOB NAME	TRUSS NAME	QUANTITY	PLY	JOB DESC. Woodcreek / Adkins	DRWG NO.
211770	C5	1	1	TRUSS DESC.	

KAMLOOPS TRUSS LTD., Kamloops, BC V2H 1G3

Version 8.420 S Mar 22 2021 MiTek Industries, Inc. Thu May 27 07:06:10 2021 Page 2

ID:X2qvwXGfFYBXzZFI6ldjmRzCaiR-amj2f8vVx1jCC8hYOBOzNU1GZ7jGCvu6gE81hTzCLWh

DRY: SEASONED LUMBER.

PLATES (table is in inches)

JT	TYPE	PLATES	W	LEN	Y	X
A	TMVW+p	MT20	5.0	6.0	2.25	2.25
B	TMW+w	MT20	2.0	4.0		
C	TMW+w	MT20	1.5	4.0		0.75
D	TTWW-m	MT20	6.0	8.0	1.75	2.75
E	TMWW-t	MT20	4.0	4.0	2.00	1.75
F	TMW+w	MT20	1.5	4.0		
G	TMWW-t	MT20	3.0	4.0		
H	TTWW-m	MT20	5.0	8.0	1.75	3.00
I	TMWW-t	MT20	5.0	6.0	2.50	1.75
J, K, L						
J	TMWW-t	MT20	5.0	6.0	2.50	2.75
M	TMVW-t	MT20	5.0	6.0	2.50	2.25
O	BMV1+p	MT20	2.0	6.0		
P	BMWW-t	MT20	5.0	6.0	3.00	2.75
Q	BS-t	MT20	8.0	10.0		
R	BMWW-t	MT20	5.0	6.0	3.00	3.00
S	BMWW+t	MT20	6.0	8.0	4.25	3.00
T	BMV1+p	MT20	2.0	6.0		
U	WMW+w	MT20	2.0	4.0		
V	WMWWW-t	MT20	5.0	8.0		
W	WMW+w	MT20	2.0	4.0		
X	WMW+w	MT20	2.0	4.0	2.00	0.50
Y	WMW+w	MT20	2.0	6.0		
Z	WMW+w	MT20	2.0	6.0	2.00	1.25
AA	WMW+w	MT20	2.0	6.0		
AB	WMWW-t	MT20	5.0	6.0		
AC	WMWW-t	MT20	4.0	4.0		
AD	WMWW-t	MT20	5.0	6.0	2.50	2.75
AE	WMWW-t	MT20	5.0	6.0	2.50	2.75

BRACING

MAX. UNBRACED TOP CHORD LENGTH = 5.15 FT.
MAX. UNBRACED BOTTOM CHORD LENGTH = 6.25 FT OR RIGID CEILING DIRECTLY APPLIED.

MAX. UNBRACED INTERIOR CHORD LENGTH = 5.76 FT

ALL PITCH BREAKS AND PERIMETER CORNER JOINTS MUST BE LATERALLY RESTRAINED.

1 LATERAL BRACE(S) AT 1/ 2 LENGTH OF A-T, C-I, C-I, C-I, C-I, C-I, C-I, C-I, B-S.

END VERTICAL(S) MUST BE SHEATHED OR HAVE BRACES AS INDICATED IN
THE MAX. UNBRACED LENGTH COLUMN OF THE TABLE BELOW

1 - 2X4 LATERAL BRACE REQUIRED AT JOINTS AD TO PREVENT ROTATION.

LOADING

TOTAL LOAD CASES: (18)

CHORDS

MEMB. FR-TO	MAX. FACTORED FORCE (LBS)	FACTORED VERT. LOAD (PLF) FROM	TO	LC1 MAX CSI (LC)	MAX. UNBRAC LENGTH
A- B	-813 / 239	-123.3	-123.3	0.30 (3)	6.25
B- C	-596 / 209	-123.3	-123.3	0.30 (3)	6.25
C- D	-604 / 222	-123.3	-123.3	0.24 (3)	6.25
D- E	-1309 / 240	-123.3	-123.3	0.07 (3)	6.23
E- F	-1847 / 343	-123.3	-123.3	0.08 (3)	5.49
F- G	-1847 / 343	-123.3	-123.3	0.08 (3)	5.49
G- H	-2176 / 405	-123.3	-123.3	0.09 (3)	5.15
H- I	-1742 / 315	-123.3	-123.3	0.07 (3)	6.25
I- J	-2041 / 463	-123.3	-123.3	0.07 (3)	6.25
J- K	-2182 / 484	-123.3	-123.3	0.27 (3)	6.25
K- L	-1428 / 221	-123.3	-123.3	0.26 (3)	6.25
L- M	-1961 / 323	-123.3	-123.3	0.13 (3)	6.25
M- N	0 / 102	-123.3	-123.3	0.13 (3)	10.00
T- A	-2714 / 500	0.0	0.0	0.30 (3)	5.66
O- M	-2395 / 348	0.0	0.0	0.16 (3)	6.25
T- S	-169 / 297	-25.0	-25.0	0.63 (3)	6.25
S- R	-104 / 941	-25.0	-25.0	0.67 (3)	6.25
R- Q	-139 / 1619	-25.0	-25.0	0.62 (3)	6.25
Q- P	-139 / 1619	-25.0	-25.0	0.62 (3)	6.25
P- O	-8 / 17	-25.0	-25.0	0.04 (3)	10.00

WEBS

MEMB. FR-TO	MAX. FACTORED FORCE (LBS)	MAX CSI (LC)
R- X	-287 / 241	0.25 (3)
X- K	-396 / 196	0.27 (3)
P- L	-161 / 264	0.03 (3)
R- L	-1004 / 379	0.24 (3)
P- M	-168 / 1751	0.20 (3)
U- D	-272 / 54	0.02 (3)
V- F	-258 / 50	0.02 (2)
C- U	-763 / 290	0.12 (3)
U-AA	-812 / 300	0.30 (3)
AA-AB	-1459 / 437	0.54 (3)
AB- V	-492 / 729	0.14 (2)
V-AC	-367 / 1276	0.17 (3)
AC- Y	-361 / 626	0.24 (3)
Y- W	-251 / 204	0.18 (3)
W- I	-252 / 170	0.12 (3)
W- H	-73 / 429	0.05 (3)
S- Z	-1030 / 157	0.35 (3)
Z- B	-780 / 139	0.33 (3)
A- S	-412 / 2618	0.30 (3)
Y-AE	-148 / 802	0.11 (3)
AE-AD	-291 / 1287	0.17 (3)
AD- X	-55 / 227	0.05 (3)
Z-AA	-809 / 172	0.09 (3)
AB- E	-762 / 161	0.05 (3)
AC- G	-294 / 75	0.02 (2)
D-AB	-280 / 1364	0.16 (3)
E- V	-212 / 1030	0.12 (3)
AC- H	-159 / 849	0.10 (2)
V- G	-429 / 114	0.03 (3)
AD- J	-580 / 129	0.04 (3)
AD- K	-188 / 844	0.10 (3)
AE- I	-124 / 385	0.04 (3)
AE- J	-474 / 152	0.03 (3)

TRUSS HAS BEEN CHECKED FOR UNBALANCED LOADING
AS PER NBCC 4.1.6.2.(8)

WIND LOAD APPLIED IS DERIVED FROM REFERENCE VELOCITY PRESSURE OF { 7.5} PSF AT {40-0-0} FT-IN-SX REFERENCE HEIGHT ABOVE GRADE AND USING EXTERNAL PEAK COEFFICIENTS, CpCg, BASED ON THE {MAIN WIND FORCE RESISTING SYSTEM}.INTERNAL WIND PRESSURE IS BASED ON DESIGN {CATEGORY 2}. BUILDING MAY BE LOCATED ON {OPEN TERRAIN}, AND TRUSS IS DESIGNED TO BE LOCATED AT LEAST {0-0} FT-IN-SX AWAY FROM EAVE.TRUSS UPLIFT IS BASED ON TOP AND BOTTOM CHORD DEAD LOADS OF 5.0 PSF AND 5.0 PSF RESPECTIVELY.

CALCULATED VERT. DEFL.(LL) = L/ 999 (0.28")
ALLOWABLE DEFL.(TL)= L/180 (1.59")
CALCULATED VERT. DEFL.(TL) = L/ 852 (0.34")

CSI: TC=0.30/1.00 (A-T:3) , BC=0.67/1.00 (R-S:3) , WB=0.54/1.00 (AA-AB:3) , SSI=0.44/1.00 (S-T:3)

DOL LUMBER=1.00 NAIL=1.00 LS BEND=1.10 COMP=1.10 SHEAR=1.10 TENS= 1.10

SNOW LOAD IMPORTANCE FACTOR = 1.00
WIND LOAD IMPORTANCE FACTOR = 1.00
LIVE LOAD IMPORTANCE FACTOR = 1.00
COMPANION LIVE LOAD FACTOR = 1.00

AUTOSOLVE HEELS OFF

TRUSS PLATE MANUFACTURER IS NOT RESPONSIBLE FOR QUALITY CONTROL IN THE TRUSS MANUFACTURING PLANT .

NAIL VALUES

PLATE	GRIP(DRY) (PSI) MAX	MIN	SHEAR (PLI) MAX	MIN	SECTION (PLI) MAX	MIN
MT20	650	371	1747	788	1987	1873

PLATE PLACEMENT TOL. = 0.250 inches

PLATE ROTATION TOL. = 5.0 Deg.

JSI GRIP= 0.89 (C) (INPUT = 0.90)
JSI METAL= 0.74 (Q) (INPUT = 1.00)

JOB NAME	TRUSS NAME	QUANTITY	PLY	JOB DESC. Woodcreek / Adkins	DRWG NO.
211770	C6	1	1	TRUSS DESC.	

KAMLOOPS TRUSS LTD., Kamloops, BC V2H 1G3

Version 8.420 S Mar 22 2021 MiTek Industries, Inc. Thu May 27 07:06:12 2021 Page 1

ID:X2qvwXGfFYBXzZFl6ldjmRzCaiR-W9qo4qxmTfzwSSrxWcQRSv6TkxXYgkAP7Xd8mMzCLWf

Scale = 1:62.5

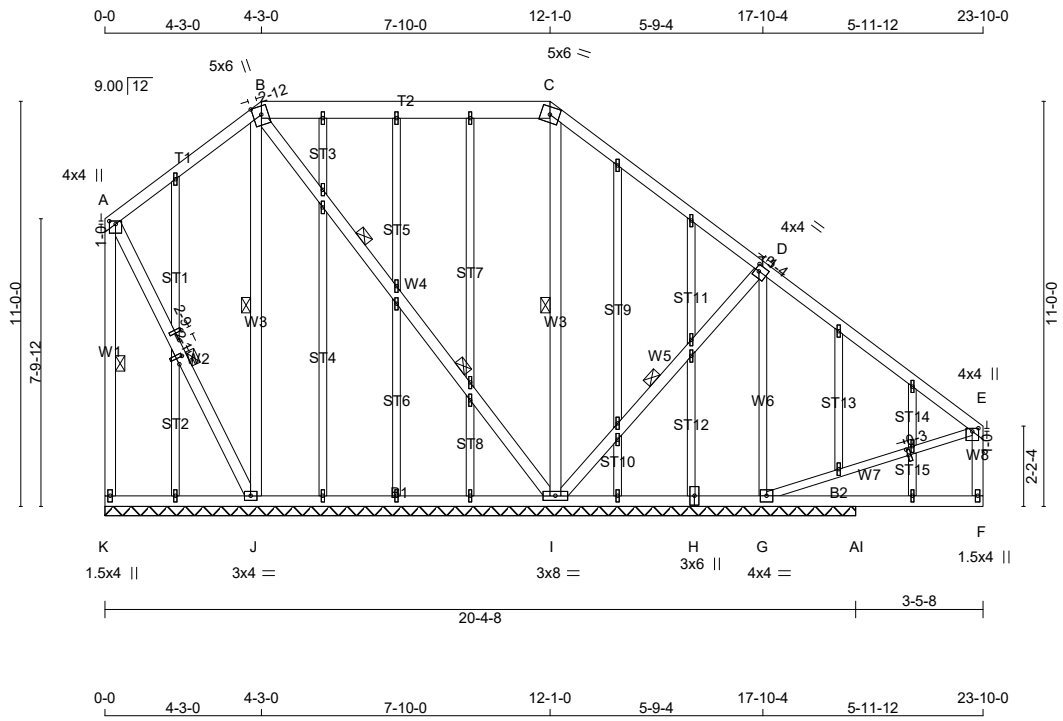

TOTAL WEIGHT = 192 lb

[M]

LUMBER

N. L. G. A. RULES

CHORDS	SIZE		LUMBER	DESCR.
A - B	2x4	DRY	1650F 1.5E	SPF
B - C	2x6	DRY	1650F 1.5E	SPF
C - E	2x4	DRY	1650F 1.5E	SPF
K - A	2x4	DRY	1650F 1.5E	SPF
F - E	2x4	DRY	1650F 1.5E	SPF
K - H	2x4	DRY	1650F 1.5E	SPF

DIMENSIONS, SUPPORTS AND LOADINGS SPECIFIED BY FABRICATOR TO BE VERIFIED BY BUILDING DESIGNER

BEARINGS

	FACTORED GROSS REACTION		MAXIMUM FACTORED GROSS REACTION			INPUT BRG	REQRD BRG
JT	VERT	HORZ	DOWN	HORZ	UPLIFT	IN-SX	IN-SX
K	206	0	206	0	0	20-4-8 (4-4-8)	2-0
J	789	0	789	0	0	20-4-8 (4-4-8)	2-0
I	1832	0	1832	0	0	20-4-8 (4-4-8)	2-0
G	1244	0	1244	0	0	20-4-8 (4-4-8)	2-0
AI	78	0	78	0	0	20-4-8 (4-4-8)	2-0

VALUE IN PARENTHESIS INDICATES EFFECTIVE BEARING LENGTH

UNFACTORED REACTIONS

	1ST LCASE	MAX./MIN. COMPONENT REACTIONS					
JT	COMBINED	SNOW	LIVE	PERM.LIVE	WIND	DEAD	SOIL
K	140	123 / 0	0 / 0	0 / 0	0 / 0	18 / 0	0 / 0
J	550	407 / 0	0 / 0	0 / 0	0 / 0	143 / 0	0 / 0
I	1258	1039 / 0	0 / 0	0 / 0	0 / 0	219 / 0	0 / 0
G	854	708 / 0	0 / 0	0 / 0	0 / 0	145 / 0	0 / 0
AI	60	13 / 0	0 / 0	0 / 0	0 / 0	47 / 0	0 / 0

BEARING MATERIAL TO BE SPF NO.2 OR BETTER AT JOINT(S) K, J, I, G, AI

DESIGN CRITERIA

SPECIFIED LOADS:

TOP CH.	LL	=	48.1	PSF
	DL	=	5.0	PSF
BOT CH.	LL	=	0.0	PSF
	DL	=	7.0	PSF
TOTAL LOAD		=	60.0	PSF

SPACING = 24.0 IN. C/C

LOADING IN FLAT SECTION BASED ON A SLOPE OF 6.00/12

THIS TRUSS IS DESIGNED FOR RESIDENTIAL OR SMALL BUILDING REQUIREMENTS OF PART 9, NBCC 2015

THIS DESIGN COMPLIES WITH:
- PART 9 OF BCBC 2018 , ABC 2019
- PART 9 OF OBC 2012 (2019 AMENDMENT)
- CSA 086-14
- TPIC 2014

(55 % OF 83.6 P.S.F. G.S.L. PLUS 2.1 P.S.F. RAIN LOAD) EQUALS 48.1 P.S.F. SPECIFIED ROOF LIVE LOAD

CSI: TC=0.84/1.00 (D-E:1) , BC=0.17/1.00 (G-I:4) , WB=0.81/1.00 (D-G:1) , SSI=0.37/1.00 (B-C:1)

CONTINUED ON PAGE 2

JOB NAME	TRUSS NAME	QUANTITY	PLY	JOB DESC. Woodcreek / Adkins	DRWG NO.
211770	C6	1	1	TRUSS DESC.	

[illegible]
[illegible]
EXCEPT
[illegible]
[illegible]

ALL GABLE WEBS
[illegible]

DRY: SEASONED LUMBER.

GABLE STUDS SPACED AT 2-0-0 OC.

PLATES (table is in inches)

JT	TYPE	PLATES	W	LEN	Y	X
A	TMVW+p	MT20	4.0	4.0	1.00	2.00
B	TTWW+m	MT20	5.0	6.0	Edge	2.75
C	TTW-m	MT20	5.0	6.0		
D	TMWW-t	MT20	4.0	4.0	2.00	1.25
E	TMVW+p	MT20	4.0	4.0	1.00	2.00
F	BMV+p	MT20	1.5	4.0		
G	BMWW1-t	MT20	4.0	4.0		
H	BSW+l	MT20	3.0	6.0		
I	BMWWW1-t	MT20	3.0	8.0		
J	BMWW1-t	MT20	3.0	4.0		
K	BMV1+p	MT20	1.5	4.0		
L, L, M, N, O, O, P, Q, R, R, S, T, V, W, Y, Z, AA, AA, AB, AC, AC, AD, AE, AF, AG, AH						
L	NP+w	MT20	1.0	4.0		
U	NP+t	MT20	1.0	4.0	2.00	2.50
X	NP+t	MT20	1.0	4.0	2.00	2.00
AH	NP+t	MT20	1.0	4.0	2.00	0.25

Edge - INDICATES REFERENCE CORNER OF PLATE TOUCHES EDGE OF CHORD.

BRACING
TOP CHORD TO BE SHEATHED OR MAX. PURLIN SPACING = 10.00 FT.
MAX. UNBRACED BOTTOM CHORD LENGTH = 6.25 FT OR RIGID CEILING DIRECTLY APPLIED.

ALL PITCH BREAKS AND PERIMETER CORNER JOINTS MUST BE LATERALLY RESTRAINED.

1 LATERAL BRACE(S) AT 1/ 2 LENGTH OF B-J, C-I, D-I, A-K, A-J.
2 LATERAL BRACE(S) AT 1/ 3 LENGTH OF B-I.

END VERTICAL(S) MUST BE SHEATHED OR HAVE BRACES AS INDICATED IN
THE MAX. UNBRACED LENGTH COLUMN OF THE TABLE BELOW

LOADING
TOTAL LOAD CASES: (4)

C H O R D S

MEMB. FR-TO	MAX. FACTORED FORCE (LBS)	FACTORED VERT. LOAD (PLF) FROM	TO	LC1 MAX CSI (LC)	MAX. UNBRAC LENGTH
A- B	0 / 70	-156.6	-156.6	0.41 (1)	10.00
B- C	0 / 367	-156.6	-156.6	0.58 (1)	10.00
C- D	0 / 409	-156.6	-156.6	0.83 (1)	10.00
D- E	0 / 506	-156.6	-156.6	0.84 (1)	10.00
K- A	-190 / 0	0.0	0.0	0.04 (1)	6.25
F- E	0 / 27	0.0	0.0	0.00 (4)	10.00
K- J	0 / 0	-17.5	-17.5	0.16 (4)	10.00
J- I	-48 / 0	-17.5	-17.5	0.17 (4)	6.25
I- H	-350 / 0	-17.5	-17.5	0.17 (4)	6.25
H- G	-350 / 0	-17.5	-17.5	0.17 (4)	6.25
G-AI	0 / 0	-17.5	-17.5	0.05 (1)	10.00
AI- F	0 / 0	-17.5	-17.5	0.05 (1)	10.00

W E B S

MEMB. FR-TO	MAX. FACTORED FORCE (LBS)	MAX CSI (LC)
J- B	-562 / 0	0.26 (1)
B- I	-532 / 0	0.17 (1)
I- C	-1234 / 0	0.56 (1)
I- D	-51 / 14	0.01 (1)
G- D	-1090 / 0	0.81 (1)
A- J	-116 / 0	0.03 (1)
G- E	-366 / 0	0.25 (1)

DOL LUMBER=1.00 NAIL=1.00 LS BEND=1.10 COMP=1.10 SHEAR=1.10
TENS= 1.10

COMPANION LIVE LOAD FACTOR = 1.00

TRUSS PLATE MANUFACTURER IS NOT RESPONSIBLE FOR QUALITY
CONTROL IN THE TRUSS MANUFACTURING PLANT .

NAIL VALUES

PLATE	GRIP(DRY) (PSI) MAX	MIN	SHEAR (PLI) MAX	MIN	SECTION (PLI) MAX	MIN
MT20	650	371	1747	788	1987	1873

PLATE PLACEMENT TOL. = 0.250 inches

PLATE ROTATION TOL. = 5.0 Deg.

JSI GRIP= 0.86 (X) (INPUT = 0.90)
JSI METAL= 0.32 (C) (INPUT = 1.00)

JOB NAME	TRUSS NAME	QUANTITY	PLY	JOB DESC. Woodcreek / Adkins	DRWG NO.
211770	C7	1	1	TRUSS DESC.	

KAMLOOPS TRUSS LTD., Kamloops, BC V2H 1G3

Version 8.420 S Mar 22 2021 MiTek Industries, Inc. Thu May 27 07:06:14 2021 Page 1

ID:X2qvwXGfFYBXzZFl6ldjmRzCaiR-SYyZVWy0?GDehm?Kd0TvXKBzVkFm8pyiar6EqEzCLWd

Scale = 1:25.5

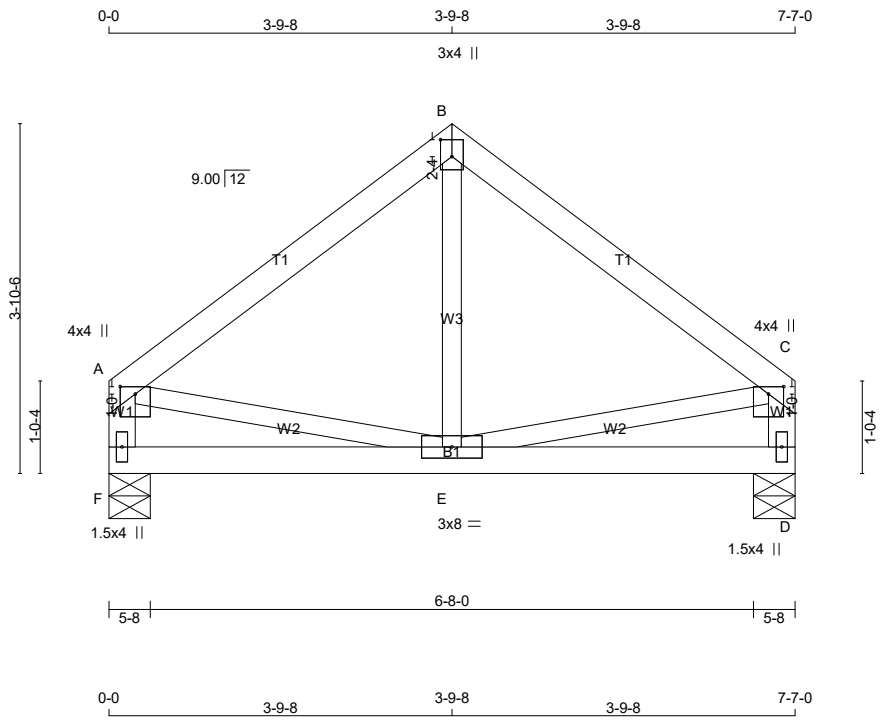

TOTAL WEIGHT = 30 lb

[M][F]

LUMBER

N. L. G. A. RULES

CHORDS	SIZE		LUMBER	DESCR.
A - B	2x4	DRY	1650F 1.5E	SPF
B - C	2x4	DRY	1650F 1.5E	SPF
F - A	2x4	DRY	1650F 1.5E	SPF
D - C	2x4	DRY	1650F 1.5E	SPF
F - D	2x4	DRY	1650F 1.5E	SPF

ALL WEBS

DIMENSIONS, SUPPORTS AND LOADINGS SPECIFIED BY FABRICATOR TO BE VERIFIED BY BUILDING DESIGNER

BEARINGS

	FACTORED GROSS REACTION		MAXIMUM FACTORED GROSS REACTION			INPUT BRG	REQRD BRG
JT	VERT	HORZ	DOWN	HORZ	UPLIFT	IN-SX	IN-SX
F	660	0	660	0	0	5-8	1-8
D	660	0	660	0	0	5-8	1-8

UNFACTORED REACTIONS

	1ST LCASE	MAX./MIN. COMPONENT REACTIONS					
JT	COMBINED	SNOW	LIVE	PERM.LIVE	WIND	DEAD	SOIL
F	455	364 / 0	0 / 0	0 / 0	0 / 0	91 / 0	0 / 0
D	455	364 / 0	0 / 0	0 / 0	0 / 0	91 / 0	0 / 0

BEARING MATERIAL TO BE SPF NO.2 OR BETTER AT JOINT(S) F, D

BRACING

TOP CHORD TO BE SHEATHED OR MAX. PURLIN SPACING = 6.25 FT.
MAX. UNBRACED BOTTOM CHORD LENGTH = 10.00 FT OR RIGID CEILING DIRECTLY APPLIED.

ALL PITCH BREAKS AND PERIMETER CORNER JOINTS MUST BE LATERALLY RESTRAINED.

DESIGN CRITERIA

SPECIFIED LOADS:

TOP	CH.	LL	=	48.1	PSF
		DL	=	5.0	PSF
BOT	CH.	LL	=	0.0	PSF
		DL	=	7.0	PSF
TOTAL	LOAD		=	60.0	PSF

SPACING = 24.0 IN. C/C

THIS TRUSS IS DESIGNED FOR RESIDENTIAL OR SMALL BUILDING REQUIREMENTS OF PART 9, NBCC 2015

THIS DESIGN COMPLIES WITH:
- PART 9 OF BCBC 2018 , ABC 2019
- PART 9 OF OBC 2012 (2019 AMENDMENT)
- CSA 086-14
- TPIC 2014

(55 % OF 83.6 P.S.F. G.S.L. PLUS 2.1 P.S.F. RAIN LOAD) EQUALS 48.1 P.S.F. SPECIFIED ROOF LIVE LOAD

ALLOWABLE DEFL.(LL)= L/180 (0.51")
CALCULATED VERT. DEFL.(LL) = L/ 999 (0.00")
ALLOWABLE DEFL.(TL)= L/180 (0.51")
CALCULATED VERT. DEFL.(TL) = L/ 999 (0.01")

CSI: TC=0.24/1.00 (A-B:1) , BC=0.06/1.00 (E-F:4) , WB=0.08/1.00 (C-E:1) , SSI=0.19/1.00 (A-B:1)

CONTINUED ON PAGE 2

JOB NAME	TRUSS NAME	QUANTITY	PLY	JOB DESC. Woodcreek / Adkins	DRWG NO.
211770	C7	1	1	TRUSS DESC.	

KAMLOOPS TRUSS LTD., Kamloops, BC V2H 1G3

ID:X2qvwXGfFYBXzZFl6ldjmRzCaiR-SYyZVWy0?GDehm?Kd0TvXKBzVkFm8pyiar6EqEzCLWd

NOTES
EXCEPT

DRY: SEASONED LUMBER.

PLATES (table is in inches)

JT	TYPE	PLATES	W	LEN	Y	X
A	TMVW+p	MT20	4.0	4.0	1.00	2.00
B	TTW+p	MT20	3.0	4.0	2.25	1.50
C	TMVW+p	MT20	4.0	4.0	1.00	2.00
D	BMV1+p	MT20	1.5	4.0		
E	BMWWW-t	MT20	3.0	8.0		
F	BMV1+p	MT20	1.5	4.0		

LOADING

TOTAL LOAD CASES: (4)

CHORDS

MEMB. FR-TO	MAX. FACTORED FORCE (LBS)	FACTORED VERT. LOAD LC1 (PLF) FROM	TO	MAX CSI (LC)	MAX. UNBRAC LENGTH
A- B	-451 / 0	-156.6	-156.6	0.24 (1)	6.25
B- C	-451 / 0	-156.6	-156.6	0.24 (1)	6.25
F- A	-633 / 0	0.0	0.0	0.04 (1)	7.81
D- C	-633 / 0	0.0	0.0	0.04 (1)	7.81
F- E	0 / 0	-17.5	-17.5	0.06 (4)	10.00
E- D	0 / 0	-17.5	-17.5	0.06 (4)	10.00

WEBS

MEMB. FR-TO	MAX. FACTORED FORCE (LBS)	MAX CSI (LC)
E- B	-53 / 63	0.02 (4)
A- E	0 / 367	0.08 (1)
E- C	0 / 367	0.08 (1)

DOL LUMBER=1.00 NAIL=1.00 LS BEND=1.10 COMP=1.10 SHEAR=1.10
TENS= 1.10

COMPANION LIVE LOAD FACTOR = 1.00

TRUSS PLATE MANUFACTURER IS NOT RESPONSIBLE FOR QUALITY CONTROL IN THE TRUSS MANUFACTURING PLANT .

NAIL VALUES

PLATE	GRIP(DRY) (PSI) MAX	MIN	SHEAR (PLI) MAX	MIN	SECTION (PLI) MAX	MIN
MT20	650	371	1747	788	1987	1873

PLATE PLACEMENT TOL. = 0.250 inches

PLATE ROTATION TOL. = 5.0 Deg.

JSI GRIP= 0.60 (A) (INPUT = 0.90)
JSI METAL= 0.18 (F) (INPUT = 1.00)

JOB NAME	TRUSS NAME	QUANTITY	PLY	JOB DESC. Woodcreek / Adkins	DRWG NO.
211770	C8	1	1	TRUSS DESC.	

KAMLOOPS TRUSS LTD., Kamloops, BC V2H 1G3

ID:X2qvwXGfFYBXzZFl6ldjmRzCaiR-wkWxirzemaLVJvaWBk_84Xk6Z8XVtF9rpVsoNhzCLWc

Scale = 1:43.9

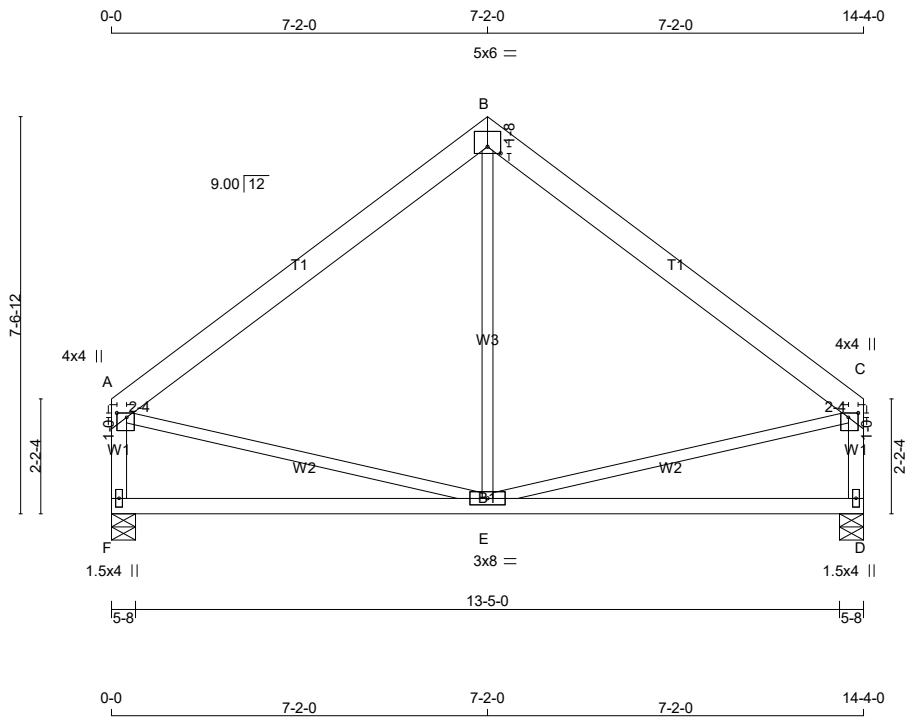

TOTAL WEIGHT = 70 lb

[M][F]

LUMBER

N. L. G. A. RULES

CHORDS	SIZE		LUMBER	DESCR.
A - B	2x6	DRY	1650F 1.5E	SPF
B - C	2x6	DRY	1650F 1.5E	SPF
F - A	2x4	DRY	1650F 1.5E	SPF
D - C	2x4	DRY	1650F 1.5E	SPF
F - D	2x4	DRY	1650F 1.5E	SPF

ALL WEBS

DIMENSIONS, SUPPORTS AND LOADINGS SPECIFIED BY FABRICATOR TO BE VERIFIED BY BUILDING DESIGNER

BEARINGS

	FACTORED GROSS REACTION		MAXIMUM FACTORED GROSS REACTION			INPUT BRG	REQRD BRG
JT	VERT	HORZ	DOWN	HORZ	UPLIFT	IN-SX	IN-SX
F	1248	0	1248	0	0	5-8	1-8
D	1248	0	1248	0	0	5-8	1-8

UNFACTORED REACTIONS

	1ST LCASE	MAX./MIN. COMPONENT REACTIONS					
JT	COMBINED	SNOW	LIVE	PERM.LIVE	WIND	DEAD	SOIL
F	861	689 / 0	0 / 0	0 / 0	0 / 0	172 / 0	0 / 0
D	861	689 / 0	0 / 0	0 / 0	0 / 0	172 / 0	0 / 0

BEARING MATERIAL TO BE SPF NO.2 OR BETTER AT JOINT(S) F, D

BRACING

TOP CHORD TO BE SHEATHED OR MAX. PURLIN SPACING = 6.25 FT.
MAX. UNBRACED BOTTOM CHORD LENGTH = 10.00 FT OR RIGID CEILING DIRECTLY APPLIED.

ALL PITCH BREAKS AND PERIMETER CORNER JOINTS MUST BE LATERALLY RESTRAINED.

DESIGN CRITERIA

SPECIFIED LOADS:

TOP CH.	LL	=	48.1	PSF
	DL	=	5.0	PSF
BOT CH.	LL	=	0.0	PSF
	DL	=	7.0	PSF
TOTAL LOAD		=	60.0	PSF

SPACING = 24.0 IN. C/C

THIS TRUSS IS DESIGNED FOR RESIDENTIAL OR SMALL BUILDING REQUIREMENTS OF PART 9, NBCC 2015

THIS DESIGN COMPLIES WITH:
- PART 9 OF BCBC 2018 , ABC 2019
- PART 9 OF OBC 2012 (2019 AMENDMENT)
- CSA 086-14
- TPIC 2014

(55 % OF 83.6 P.S.F. G.S.L. PLUS 2.1 P.S.F. RAIN LOAD) EQUALS 48.1 P.S.F. SPECIFIED ROOF LIVE LOAD

ALLOWABLE DEFL.(LL)= L/180 (0.96")
CALCULATED VERT. DEFL.(LL) = L/ 999 (0.01")
ALLOWABLE DEFL.(TL)= L/180 (0.96")
CALCULATED VERT. DEFL.(TL) = L/ 999 (0.05")

CSI: TC=0.35/1.00 (A-B:1) , BC=0.22/1.00 (E-F:4) , WB=0.15/1.00 (B-E:1) , SSI=0.27/1.00 (A-B:1)

CONTINUED ON PAGE 2

JOB NAME	TRUSS NAME	QUANTITY	PLY	JOB DESC. Woodcreek / Adkins	DRWG NO.
211770	C8	1	1	TRUSS DESC.	

KAMLOOPS TRUSS LTD., Kamloops, BC V2H 1G3

ID:X2qvwXGfFYBXzZFI6ldjmRzCaiR-Ow4JwB_GXtUMw39ilRVNclGHJYtkciP?29bLv7zCLWb

NOTES
EXCEPT

DRY: SEASONED LUMBER.

PLATES (table is in inches)

JT	TYPE	PLATES	W	LEN	Y	X
A	TMVW+p	MT20	4.0	4.0	1.00	2.25
B	TTW-p	MT20	5.0	6.0	1.50	3.00
C	TMVW+p	MT20	4.0	4.0	1.00	2.25
D	BMV1+p	MT20	1.5	4.0		
E	BMWWW-t	MT20	3.0	8.0		
F	BMV1+p	MT20	1.5	4.0		

LOADING

TOTAL LOAD CASES: (4)

C H O R D S

MEMB. FR-TO	MAX. FACTORED FORCE (LBS)	FACTORED VERT. LOAD (PLF) FROM	TO	LC1 MAX CSI (LC)	MAX. UNBRAC LENGTH
A- B	-803 / 0	-156.6	-156.6	0.35 (1)	6.25
B- C	-803 / 0	-156.6	-156.6	0.35 (1)	6.25
F- A	-1200 / 0	0.0	0.0	0.09 (1)	7.81
D- C	-1200 / 0	0.0	0.0	0.09 (1)	7.81
F- E	0 / 0	-17.5	-17.5	0.22 (4)	10.00
E- D	0 / 0	-17.5	-17.5	0.22 (4)	10.00

W E B S

MEMB. FR-TO	MAX. FACTORED FORCE (LBS)	MAX CSI (LC)
E- B	-159 / 107	0.15 (1)
A- E	0 / 661	0.15 (1)
E- C	0 / 661	0.15 (1)

DOL LUMBER=1.00 NAIL=1.00 LS BEND=1.10 COMP=1.10 SHEAR=1.10
TENS= 1.10

COMPANION LIVE LOAD FACTOR = 1.00

TRUSS PLATE MANUFACTURER IS NOT RESPONSIBLE FOR QUALITY CONTROL IN THE TRUSS MANUFACTURING PLANT .

NAIL VALUES

PLATE	GRIP(DRY) (PSI) MAX	MIN	SHEAR (PLI) MAX	MIN	SECTION (PLI) MAX	MIN
MT20	650	371	1747	788	1987	1873

PLATE PLACEMENT TOL. = 0.250 inches

PLATE ROTATION TOL. = 5.0 Deg.

JSI GRIP= 0.89 (C) (INPUT = 0.90)
JSI METAL= 0.34 (F) (INPUT = 1.00)

JOB NAME	TRUSS NAME	QUANTITY	PLY	JOB DESC. Woodcreek / Adkins	DRWG NO.
211770	C9	3	1	TRUSS DESC.	

KAMLOOPS TRUSS LTD., Kamloops, BC V2H 1G3

ID:X2qvwXGfFYBXzZFl6ldjmRzCaiR-s6eh7X_uIBcCYDkuJ90c9ypS3yDzL9f8HpLvRZzCLWa

Scale = 1:43.9

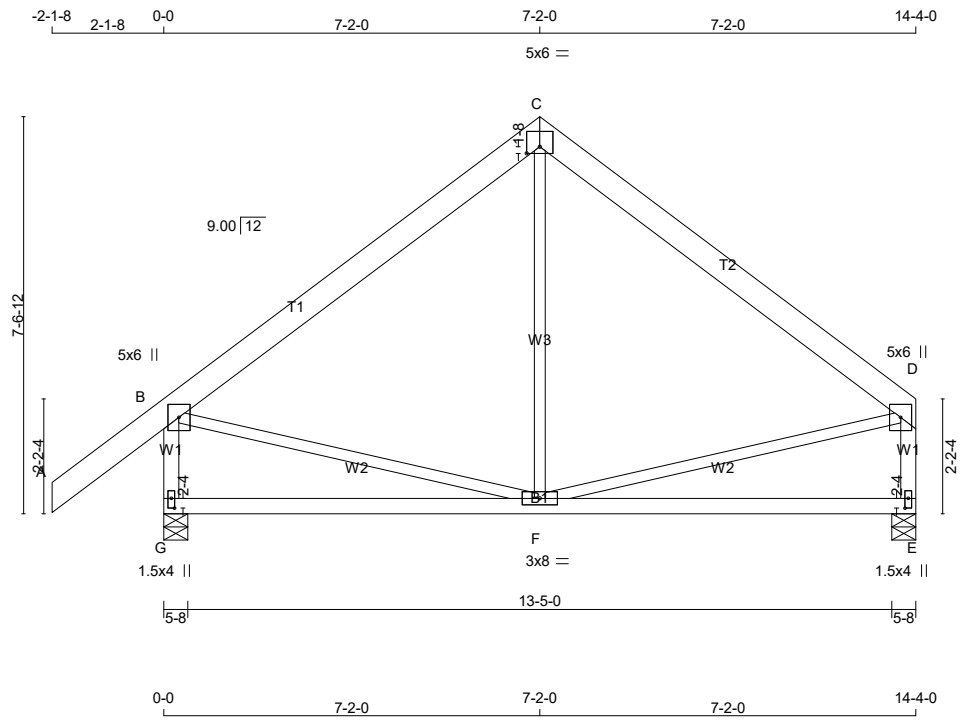

TOTAL WEIGHT = 3 X 75 = 224 lb

[M][F]

LUMBER

N. L. G. A. RULES

CHORDS	SIZE		LUMBER	DESCR.
A - C	2x6	DRY	1650F 1.5E	SPF
C - D	2x6	DRY	1650F 1.5E	SPF
G - B	2x4	DRY	1650F 1.5E	SPF
E - D	2x4	DRY	1650F 1.5E	SPF
G - E	2x4	DRY	1650F 1.5E	SPF

ALL WEBS

DIMENSIONS, SUPPORTS AND LOADINGS SPECIFIED BY FABRICATOR TO BE VERIFIED BY BUILDING DESIGNER

BEARINGS

	FACTORED GROSS REACTION		MAXIMUM GROSS REACTION			INPUT BRG	REQRD BRG
JT	VERT	HORZ	DOWN	HORZ	UPLIFT	IN-SX	IN-SX
G	1602	0	1602	0	0	5-8	1-12
E	1248	0	1248	0	0	5-8	1-8

UNFACTORED REACTIONS

	1ST LCASE	MAX./MIN. COMPONENT REACTIONS					
JT	COMBINED	SNOW	LIVE	PERM.LIVE	WIND	DEAD	SOIL
G	1101	906 / 0	0 / 0	0 / 0	0 / 0	195 / 0	0 / 0
E	861	689 / 0	0 / 0	0 / 0	0 / 0	172 / 0	0 / 0

BEARING MATERIAL TO BE SPF NO.2 OR BETTER AT JOINT(S) G, E

BRACING

TOP CHORD TO BE SHEATHED OR MAX. PURLIN SPACING = 6.25 FT.
MAX. UNBRACED BOTTOM CHORD LENGTH = 10.00 FT OR RIGID CEILING DIRECTLY APPLIED.

ALL PITCH BREAKS AND PERIMETER CORNER JOINTS MUST BE LATERALLY RESTRAINED.

DESIGN CRITERIA

SPECIFIED LOADS:

TOP	CH.	LL	=	48.1	PSF
		DL	=	5.0	PSF
BOT	CH.	LL	=	0.0	PSF
		DL	=	7.0	PSF
TOTAL	LOAD		=	60.0	PSF

SPACING = 24.0 IN. C/C

THIS TRUSS IS DESIGNED FOR RESIDENTIAL OR SMALL BUILDING REQUIREMENTS OF PART 9, NBCC 2015

THIS DESIGN COMPLIES WITH:
- PART 9 OF BCBC 2018 , ABC 2019
- PART 9 OF OBC 2012 (2019 AMENDMENT)
- CSA 086-14
- TPIC 2014

(55 % OF 83.6 P.S.F. G.S.L. PLUS 2.1 P.S.F. RAIN LOAD) EQUALS 48.1 P.S.F. SPECIFIED ROOF LIVE LOAD

ALLOWABLE DEFL.(LL)= L/180 (0.96")
CALCULATED VERT. DEFL.(LL) = L/ 999 (0.01")
ALLOWABLE DEFL.(TL)= L/180 (0.96")
CALCULATED VERT. DEFL.(TL) = L/ 999 (0.06")

CSI: TC=0.35/1.00 (B-C:1) , BC=0.22/1.00 (F-G:4) , WB=0.15/1.00 (C-F:1) , SSI=0.27/1.00 (C-D:1)

CONTINUED ON PAGE 2

JOB NAME	TRUSS NAME	QUANTITY	PLY	JOB DESC. Woodcreek / Adkins	DRWG NO.
211770	C9	3	1	TRUSS DESC.	

KAMLOOPS TRUSS LTD., Kamloops, BC V2H 1G3

ID:X2qvwXGfFYBXzZFl6ldjmRzCaiR-s6eh7X_uIBcCYDkuJ90c9ypS3yDzL9f8HpLvRZzCLWa

NOTES
EXCEPT

DRY: SEASONED LUMBER.

PLATES (table is in inches)

JT	TYPE	PLATES	W	LEN	Y	X
B	TMVW+p	MT20	5.0	6.0		
C	TTW-p	MT20	5.0	6.0	1.50	3.00
D	TMVW+p	MT20	5.0	6.0		
E	BMV1+p	MT20	1.5	4.0	2.25	0.75
F	BMWWW-t	MT20	3.0	8.0		
G	BMV1+p	MT20	1.5	4.0	2.25	0.75

LOADING

TOTAL LOAD CASES: (4)

C H O R D S

MEMB. FR-TO	MAX. FACTORED FORCE (LBS)	FACTORED VERT. LOAD (PLF) FROM	TO	LC1 MAX CSI (LC)	MAX. UNBRAC LENGTH
A- B	0 / 106	-156.6	-156.6	0.19 (1)	10.00
B- C	-803 / 0	-156.6	-156.6	0.35 (1)	6.25
C- D	-803 / 0	-156.6	-156.6	0.35 (1)	6.25
G- B	-1555 / 0	0.0	0.0	0.11 (1)	7.37
E- D	-1200 / 0	0.0	0.0	0.09 (1)	7.81
G- F	0 / 0	-17.5	-17.5	0.22 (4)	10.00
F- E	0 / 0	-17.5	-17.5	0.22 (4)	10.00

W E B S

MEMB. FR-TO	MAX. FACTORED FORCE (LBS)	MAX CSI (LC)
F- C	-159 / 107	0.15 (1)
B- F	0 / 661	0.15 (1)
F- D	0 / 661	0.15 (1)

DOL LUMBER=1.00 NAIL=1.00 LS BEND=1.10 COMP=1.10 SHEAR=1.10
TENS= 1.10

COMPANION LIVE LOAD FACTOR = 1.00

TRUSS PLATE MANUFACTURER IS NOT RESPONSIBLE FOR QUALITY CONTROL IN THE TRUSS MANUFACTURING PLANT .

NAIL VALUES

PLATE	GRIP(DRY) (PSI) MAX	MIN	SHEAR (PLI) MAX	MIN	SECTION (PLI) MAX	MIN
MT20	650	371	1747	788	1987	1873

PLATE PLACEMENT TOL. = 0.250 inches

PLATE ROTATION TOL. = 5.0 Deg.

JSI GRIP= 0.89 (E) (INPUT = 0.90)
JSI METAL= 0.48 (D) (INPUT = 1.00)

JOB NAME	TRUSS NAME	QUANTITY	PLY	JOB DESC.	DRWG NO.
211770	F1	1	1	Woodcreek / Adkins TRUSS DESC.	

KAMLOOPS TRUSS LTD., Kamloops, BC V2H 1G3

ID:X2qvwXGfFYBXzZFl6ldjmRzCaiR-pVlSYD09qoswoXtHQa24ENupHlyzp3tRk7q?WSzCLWY

Scale = 1:23.7

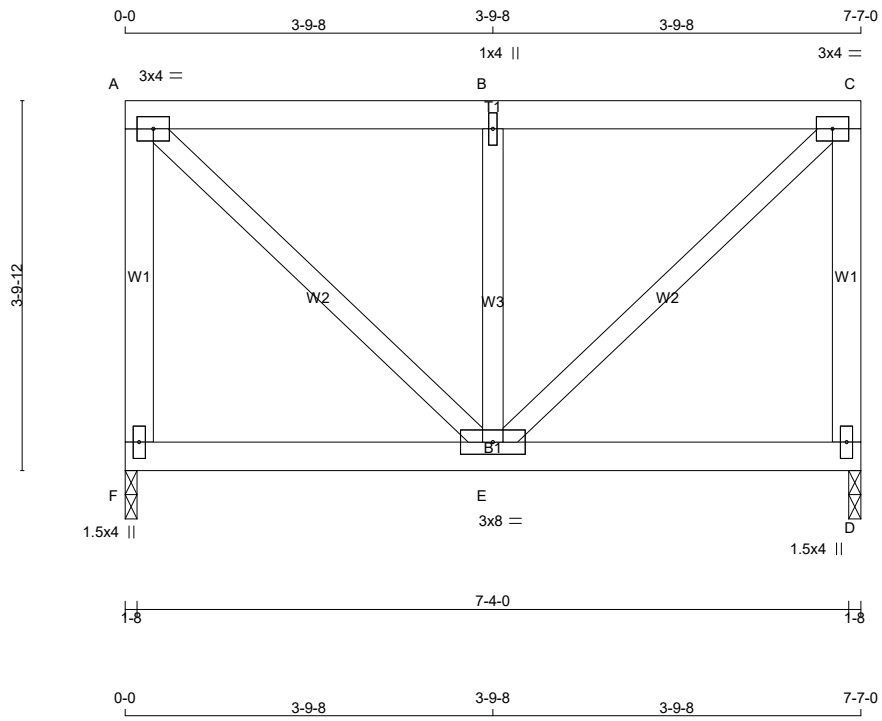

TOTAL WEIGHT = 35 lb

LUMBER

N. L. G. A. RULES

CHORDS	SIZE		LUMBER	DESCR.
F - A	2x4	DRY	1650F 1.5E	SPF
A - C	2x4	DRY	1650F 1.5E	SPF
D - C	2x4	DRY	1650F 1.5E	SPF
F - D	2x4	DRY	1650F 1.5E	SPF
ALL WEBS	2x3	DRY	No.2	SPF

DIMENSIONS, SUPPORTS AND LOADINGS SPECIFIED BY FABRICATOR TO BE VERIFIED BY BUILDING DESIGNER

BEARINGS

JT	FACTORED GROSS REACTION VERT	HORZ	MAXIMUM FACTORED GROSS REACTION DOWN	HORZ	UPLIFT	INPUT BRG	REQRD BRG
F	660	0	660	0	0	1-8	1-8
D	660	0	660	0	0	1-8	1-8

UNFACTORED REACTIONS

JT	1ST LCASE COMBINED	MAX./MIN. COMPONENT REACTIONS SNOW	LIVE	PERM.LIVE	WIND	DEAD	SOIL
F	455	364 / 0	0 / 0	0 / 0	0 / 0	91 / 0	0 / 0
D	455	364 / 0	0 / 0	0 / 0	0 / 0	91 / 0	0 / 0

BRACING

TOP CHORD TO BE SHEATHED OR MAX. PURLIN SPACING = 6.25 FT.
MAX. UNBRACED BOTTOM CHORD LENGTH = 10.00 FT OR RIGID CEILING DIRECTLY APPLIED.

ALL PITCH BREAKS AND PERIMETER CORNER JOINTS MUST BE LATERALLY RESTRAINED.

LOADING

TOTAL LOAD CASES: (4)

CHORDS

MEMB. FR-TO	MAX. FACTORED FORCE (LBS)	FACTORED VERT. LOAD (PLF) FROM	TO	LC1	MAX CSI (LC)	MAX. UNBRAC LENGTH
F- A	-631 / 0	0.0	0.0	0.10 (1)	7.81	
A- B	-435 / 0	-156.6	-156.6	0.30 (1)	6.25	
B- C	-435 / 0	-156.6	-156.6	0.30 (1)	6.25	

WEBS

MEMB. FR-TO	MAX. FACTORED FORCE (LBS)	MAX CSI (LC)
A- E	0 / 593	0.13 (1)
E- B	-733 / 0	0.17 (1)
E- C	0 / 593	0.13 (1)

DESIGN CRITERIA

SPECIFIED LOADS:

TOP CH.	LL	=	48.1	PSF
	DL	=	5.0	PSF
BOT CH.	LL	=	0.0	PSF
	DL	=	7.0	PSF
TOTAL LOAD		=	60.0	PSF

SPACING = 24.0 IN. C/C

LOADING IN FLAT SECTION BASED ON A SLOPE OF 6.00/12

THIS TRUSS IS DESIGNED FOR RESIDENTIAL OR SMALL BUILDING REQUIREMENTS OF PART 9, NBCC 2015

THIS DESIGN COMPLIES WITH:
- PART 9 OF BCBC 2018 , ABC 2019
- PART 9 OF OBC 2012 (2019 AMENDMENT)
- CSA 086-14
- TPIC 2014

(55 % OF 83.6 P.S.F. G.S.L. PLUS 2.1 P.S.F. RAIN LOAD) EQUALS 48.1 P.S.F. SPECIFIED ROOF LIVE LOAD

ALLOWABLE DEFL.(LL)= L/180 (0.51")
CALCULATED VERT. DEFL.(LL) = L/ 999 (0.01")
ALLOWABLE DEFL.(TL)= L/180 (0.51")
CALCULATED VERT. DEFL.(TL) = L/ 999 (0.01")

CONTINUED ON PAGE 2

JOB NAME	TRUSS NAME	QUANTITY	PLY	JOB DESC. Woodcreek / Adkins	DRWG NO.
211770	F1	1	1	TRUSS DESC.	

KAMLOOPS TRUSS LTD., Kamloops, BC V2H 1G3

ID:X2qvwXGfFYBXzZFl6ldjmRzCaiR-pVlSYD09qoswoXtHQa24ENupHlyzp3tRk7q?WSzCLWY

DRY: SEASONED LUMBER.

PLATES (table is in inches)

JT	TYPE	PLATES	W	LEN	Y	X
A	TMVW-t	MT20	3.0	4.0		
B	TMW+w	MT20	1.0	4.0		
C	TMVW-t	MT20	3.0	4.0		
D	BMV1+p	MT20	1.5	4.0		
E	BMWWW-t	MT20	3.0	8.0		
F	BMV1+p	MT20	1.5	4.0		

LOADING

TOTAL LOAD CASES: (4)

CHORDS MEMB. FR-TO	MAX. FACTORED FORCE (LBS)	FACTORED VERT. LOAD (PLF) FROM	TO	LC1 MAX CSI (LC)	WEBS MAX. MEMB. UNBRAC LENGTH	MAX. FACTORED FORCE (LBS)	MAX FR-TO CSI (LC)
D- C	-631 / 0	0.0	0.0	0.10 (1)	7.81		
F- E	0 / 0	-17.5	-17.5	0.06 (4)	10.00		
E- D	0 / 0	-17.5	-17.5	0.06 (4)	10.00		

CSI: TC=0.30/1.00 (B-C:1) , BC=0.06/1.00 (E-F:4) , WB=0.17/1.00 (B-E:1) , SSI=0.29/1.00 (A-B:1)

DOL LUMBER=1.00 NAIL=1.00 LS BEND=1.10 COMP=1.10 SHEAR=1.10 TENS= 1.10

COMPANION LIVE LOAD FACTOR = 1.00

TRUSS PLATE MANUFACTURER IS NOT RESPONSIBLE FOR QUALITY CONTROL IN THE TRUSS MANUFACTURING PLANT .

NAIL VALUES

PLATE	GRIP(DRY) (PSI) MAX	MIN	SHEAR (PLI) MAX	MIN	SECTION (PLI) MAX	MIN
MT20	650	371	1747	788	1987	1873

PLATE PLACEMENT TOL. = 0.250 inches

PLATE ROTATION TOL. = 5.0 Deg.

JSI GRIP= 0.89 (C) (INPUT = 0.90)
JSI METAL= 0.31 (B) (INPUT = 1.00)

JOB NAME	TRUSS NAME	QUANTITY	PLY	JOB DESC.	DRWG NO.
211770	F2	1	1	Woodcreek / Adkins TRUSS DESC.	

KAMLOOPS TRUSS LTD., Kamloops, BC V2H 1G3

ID:X2qvwXGfFYBXzZFl6ldjmRzCaiR-HhJqmZ1nb6_nPhST_HaJnbR_19ICYW6aznZZ2uzCLWX

Scale = 1:23.7

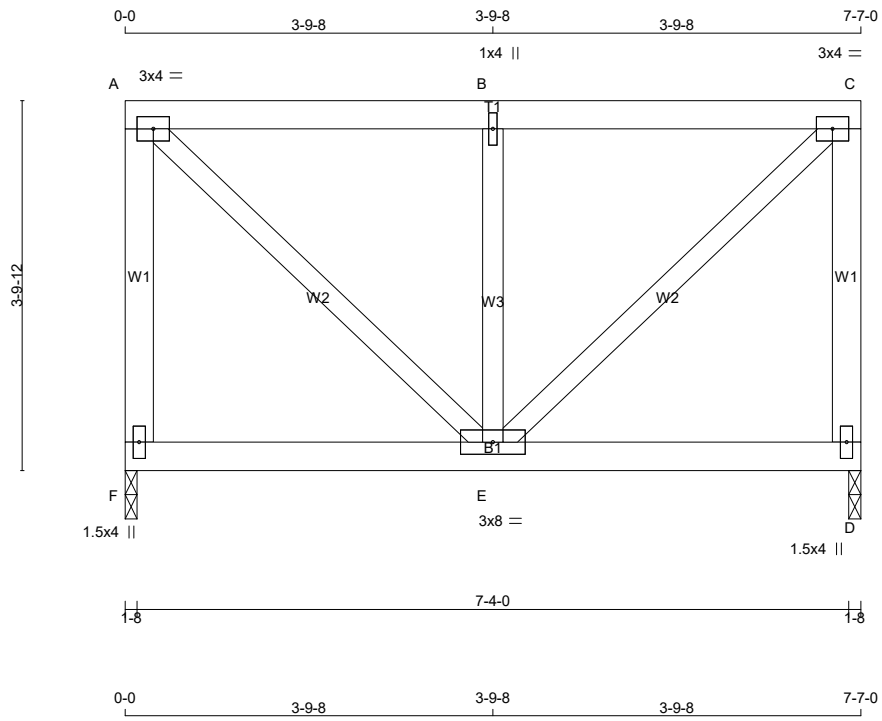

TOTAL WEIGHT = 35 lb

LUMBER

N. L. G. A. RULES

CHORDS	SIZE		LUMBER	DESCR.
F - A	2x4	DRY	1650F 1.5E	SPF
A - C	2x4	DRY	1650F 1.5E	SPF
D - C	2x4	DRY	1650F 1.5E	SPF
F - D	2x4	DRY	1650F 1.5E	SPF
ALL WEBS	2x3	DRY	No.2	SPF

DIMENSIONS, SUPPORTS AND LOADINGS SPECIFIED BY FABRICATOR TO BE VERIFIED BY BUILDING DESIGNER

BEARINGS

JT	FACTORED GROSS REACTION VERT	HORZ	MAXIMUM FACTORED GROSS REACTION DOWN	HORZ	UPLIFT	INPUT BRG	REQRD BRG
F	660	0	660	0	0	1-8	1-8
D	660	0	660	0	0	1-8	1-8

UNFACTORED REACTIONS

JT	1ST LCASE COMBINED	MAX./MIN. COMPONENT REACTIONS SNOW	LIVE	PERM.LIVE	WIND	DEAD	SOIL
F	455	364 / 0	0 / 0	0 / 0	0 / 0	91 / 0	0 / 0
D	455	364 / 0	0 / 0	0 / 0	0 / 0	91 / 0	0 / 0

BRACING

TOP CHORD TO BE SHEATHED OR MAX. PURLIN SPACING = 6.25 FT.
MAX. UNBRACED BOTTOM CHORD LENGTH = 10.00 FT OR RIGID CEILING DIRECTLY APPLIED.

ALL PITCH BREAKS AND PERIMETER CORNER JOINTS MUST BE LATERALLY RESTRAINED.

LOADING

TOTAL LOAD CASES: (4)

CHORDS

MEMB. FR-TO	MAX. FACTORED FORCE (LBS)	FACTORED VERT. LOAD (PLF) FROM	TO	LC1	MAX CSI (LC)	MAX. UNBRAC LENGTH
F- A	-631 / 0	0.0	0.0	0.10 (1)	7.81	
A- B	-435 / 0	-156.6	-156.6	0.30 (1)	6.25	
B- C	-435 / 0	-156.6	-156.6	0.30 (1)	6.25	

WEBS

MEMB. FR-TO	MAX. FACTORED FORCE (LBS)	MAX CSI (LC)
A- E	0 / 593	0.13 (1)
E- B	-733 / 0	0.17 (1)
E- C	0 / 593	0.13 (1)

DESIGN CRITERIA

SPECIFIED LOADS:

TOP CH.	LL	=	48.1	PSF
	DL	=	5.0	PSF
BOT CH.	LL	=	0.0	PSF
	DL	=	7.0	PSF
TOTAL LOAD		=	60.0	PSF

SPACING = 24.0 IN. C/C

LOADING IN FLAT SECTION BASED ON A SLOPE OF 6.00/12

THIS TRUSS IS DESIGNED FOR RESIDENTIAL OR SMALL BUILDING REQUIREMENTS OF PART 9, NBCC 2015

THIS DESIGN COMPLIES WITH:
- PART 9 OF BCBC 2018 , ABC 2019
- PART 9 OF OBC 2012 (2019 AMENDMENT)
- CSA 086-14
- TPIC 2014

(55 % OF 83.6 P.S.F. G.S.L. PLUS 2.1 P.S.F. RAIN LOAD) EQUALS 48.1 P.S.F. SPECIFIED ROOF LIVE LOAD

ALLOWABLE DEFL.(LL)= L/180 (0.51")
CALCULATED VERT. DEFL.(LL) = L/ 999 (0.01")
ALLOWABLE DEFL.(TL)= L/180 (0.51")
CALCULATED VERT. DEFL.(TL) = L/ 999 (0.01")

CONTINUED ON PAGE 2

JOB NAME	TRUSS NAME	QUANTITY	PLY	JOB DESC. Woodcreek / Adkins	DRWG NO.
211770	F2	1	1	TRUSS DESC.	

KAMLOOPS TRUSS LTD., Kamloops, BC V2H 1G3

Version 8.420 S Mar 22 2021 MiTek Industries, Inc. Thu May 27 07:06:21 2021 Page 2

ID:X2qvwXGfFYBXzZFI6ldjmRzCaiR-lutCzv2PLQ6e1q1gY?5YJo_9nZdRHzMkCRJ6aLzCLWW

DRY: SEASONED LUMBER.

PLATES (table is in inches)

JT	TYPE	PLATES	W	LEN	Y	X
A	TMVW-t	MT20	3.0	4.0		
B	TMW+w	MT20	1.0	4.0		
C	TMVW-t	MT20	3.0	4.0		
D	BMV1+p	MT20	1.5	4.0		
E	BMWWW-t	MT20	3.0	8.0		
F	BMV1+p	MT20	1.5	4.0		

LOADING

TOTAL LOAD CASES: (4)

CHORDS MEMB. FR-TO	MAX. FACTORED FORCE (LBS)	FACTORED VERT. LOAD (PLF) FROM	TO	LC1 MAX CSI (LC)	WEBS MAX. MEMB. UNBRAC LENGTH	MAX. FACTORED FORCE (LBS)	MAX FR-TO CSI (LC)
D- C	-631 / 0	0.0	0.0	0.10 (1)	7.81		
F- E	0 / 0	-17.5	-17.5	0.06 (4)	10.00		
E- D	0 / 0	-17.5	-17.5	0.06 (4)	10.00		

CSI: TC=0.30/1.00 (B-C:1) , BC=0.06/1.00 (E-F:4) , WB=0.17/1.00 (B-E:1) , SSI=0.29/1.00 (B-C:1)

DOL LUMBER=1.00 NAIL=1.00 LS BEND=1.10 COMP=1.10 SHEAR=1.10 TENS= 1.10

COMPANION LIVE LOAD FACTOR = 1.00

TRUSS PLATE MANUFACTURER IS NOT RESPONSIBLE FOR QUALITY CONTROL IN THE TRUSS MANUFACTURING PLANT .

NAIL VALUES

PLATE	GRIP(DRY) (PSI) MAX	MIN	SHEAR (PLI) MAX	MIN	SECTION (PLI) MAX	MIN
MT20	650	371	1747	788	1987	1873

PLATE PLACEMENT TOL. = 0.250 inches

PLATE ROTATION TOL. = 5.0 Deg.

JSI GRIP= 0.89 (C) (INPUT = 0.90)
JSI METAL= 0.31 (B) (INPUT = 1.00)

JOB NAME	TRUSS NAME	QUANTITY	PLY	JOB DESC. Woodcreek / Adkins	DRWG NO.
211770	G1	1	2	TRUSS DESC.	

KAMLOOPS TRUSS LTD., Kamloops, BC V2H 1G3

Version 8.420 S Mar 22 2021 MiTek Industries, Inc. Thu May 27 07:06:23 2021 Page 1

ID:X2qvwXGfFYBXzZFl6ldjmRzCaiR-hG?zOb3ft1MMG8B2fP70OD3V5NEzlsH1floDfDzCLWU

Scale = 1:75.6

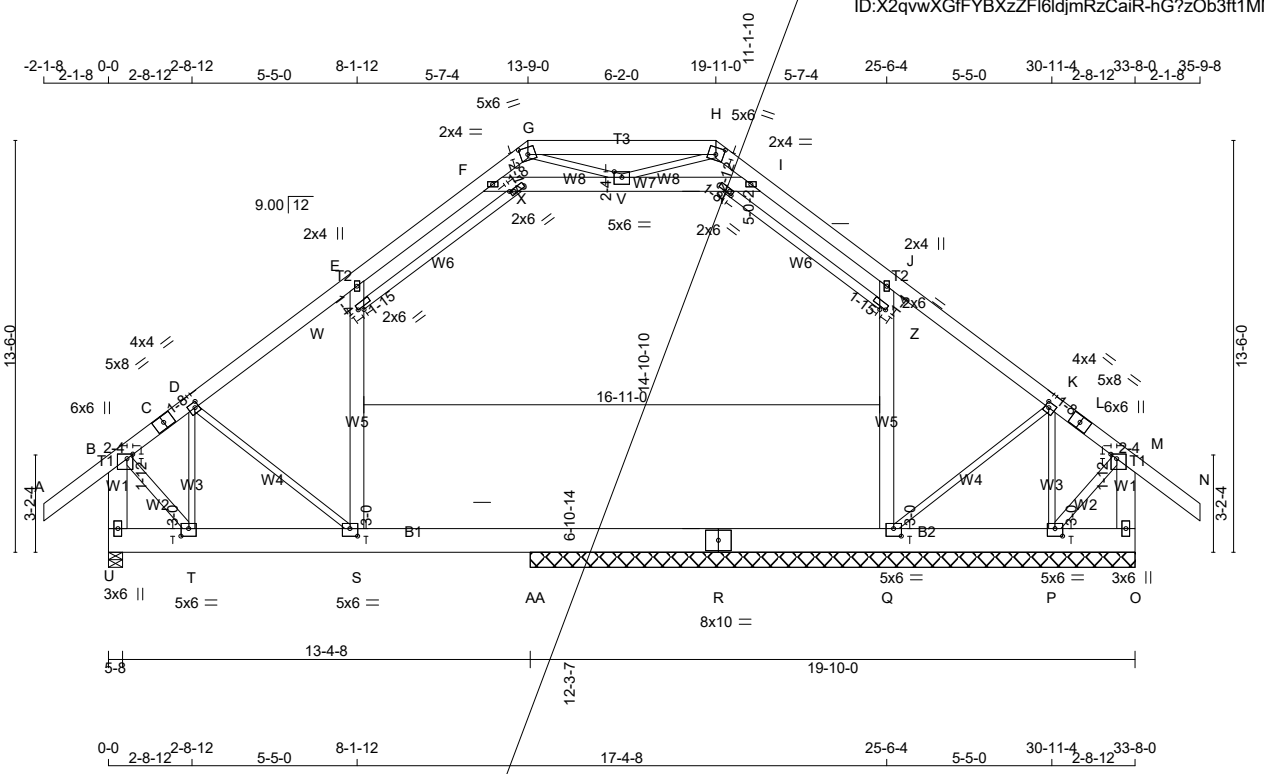

TOTAL WEIGHT = 2 X 306 = 612 lb

[M]

LUMBER

N. L. G. A. RULES

CHORDS	SIZE		LUMBER	DESCR.
A - C	2x6	DRY	1650F 1.5E	SPF
C - G	2x6	DRY	1650F 1.5E	SPF
H - L	2x6	DRY	1650F 1.5E	SPF
L - N	2x6	DRY	1650F 1.5E	SPF
G - H	2x6	DRY	1650F 1.5E	SPF
U - B	2x8	DRY	1950F 1.7E	DF

DIMENSIONS, SUPPORTS AND LOADINGS SPECIFIED BY FABRICATOR TO BE VERIFIED BY BUILDING DESIGNER

BEARINGS

JT	FACTORED GROSS REACTION VERT	HORZ	MAXIMUM FACTORED GROSS REACTION DOWN	HORZ	UPLIFT	INPUT BRG IN-SX	REQRD BRG IN-SX
U	3649	0	4030	-511	-389	5-8	2-3
Q	1494	0	2465	0	-420	19-10-0 (13-8-0)	2-3
P	-34	0	165	0	-302	19-10-0 (13-8-0)	2-3
O	3263	0	3263	0	-199	19-10-0 (13-8-0)	2-3
AA	1994	0	2521	0	-59	19-10-0 (13-8-0)	2-3

VALUE IN PARENTHESIS INDICATES EFFECTIVE BEARING LENGTH

PROVIDE ANCHORAGE AT BEARING JOINT U FOR 389 LBS FACTORED UPLIFT
PROVIDE ANCHORAGE AT BEARING JOINT Q FOR 420 LBS FACTORED UPLIFT
PROVIDE ANCHORAGE AT BEARING JOINT P FOR 302 LBS FACTORED UPLIFT
PROVIDE ANCHORAGE AT BEARING JOINT O FOR 199 LBS FACTORED UPLIFT
PROVIDE ANCHORAGE AT BEARING JOINT AA FOR 150 LBS FACTORED UPLIFT

PROVIDE FOR 511 LBS FACTORED HORIZONTAL REACTION AT JOINT U

UNFACTORED REACTIONS

JT	1ST LCASE COMBINED	MAX./MIN. COMPONENT REACTIONS SNOW	LIVE	PERM.LIVE	WIND	DEAD	SOIL
U	2600	2177 / 0	325 / 0	0 / 0	200 / -487	351 / 0	0 / 0
Q	1261	959 / -620	642 / 0	0 / 0	317 / -344	306 / 0	0 / 0
P	-80	105 / -30	0 / -158	0 / 0	104 / -188	0 / -39	0 / 0
O	2323	1730 / 0	297 / 0	0 / 0	209 / -326	296 / 0	0 / 0
AA	1723	526 / -214	957 / 0	0 / 0	189 / -295	448 / 0	0 / 0

DESIGN CRITERIA

SPECIFIED LOADS:

TOP CH.	LL	=	57.5	PSF
	DL	=	5.0	PSF
BOT CH.	LL	=	10.0	PSF
	DL	=	7.0	PSF
TOTAL LOAD		=	79.5	PSF
ATTIC FLOOR		=	40.0	PSF
	DL	=	10.0	PSF
CEILING	DL	=	5.0	PSF

SPACING = 24.0 IN. C/C

LOADING IN FLAT SECTION BASED ON A SLOPE OF 9.00/12

THIS TRUSS IS DESIGNED FOR COMMERCIAL OR INDUSTRIAL BUILDING REQUIREMENTS OF PART 4, NBCC 2015

THIS DESIGN COMPLIES WITH:
- PART 4 OF BCBC 2018 , ABC 2019
- PART 4 OF OBC 2012 (2019 AMENDMENT)
- CSA 086-14
- TPIC 2014

DESIGN ASSUMPTIONS
- SLOPE REDUCTION FACTOR USED
-OVERHANG NOT TO BE ALTERED OR CUT OFF.

CONTINUED ON PAGE 2

JOB NAME	TRUSS NAME	QUANTITY	PLY	JOB DESC.	DRWG NO.
211770	G1	1	2	Woodcreek / Adkins TRUSS DESC.	

DRY: SEASONED LUMBER.

DESIGN CONSISTS OF **2** TRUSSES BUILT SEPARATELY THEN FASTENED TOGETHER AS FOLLOWS:

CHORDS	#ROWS	SURFACE SPACING (IN)	LOAD(PLF)
TOP CHORDS : (0.122"X3") SPIRAL NAILS			
A- C	2	12	TOP
C- G	2	12	TOP
L- H	2	12	TOP
N- L	2	12	TOP
G- H	2	12	TOP
U- B	2	12	TOP
O- M	2	12	TOP
BOTTOM CHORDS : (0.122"X3") SPIRAL NAILS			
U- R	3	12	TOP
R- O	3	12	TOP
WEBS : (0.122"X3") SPIRAL NAILS			
2x3	1	6	
2x4	1	6	
2x6	2	6	

NAILS TO BE DRIVEN FROM ONE SIDE ONLY.

TOP - COMPONENTS ARE LOADED FROM THE TOP AND MUST BE PLACED ON TOP EDGE OF ALL PLIES FOR THE LOAD TO BE TRANSFERRED TO EACH PLY.

PLATES (table is in inches)

JT	TYPE	PLATES	W	LEN	Y	X
B	TMVW+p	MT20	6.0	6.0	1.75	2.25
C	TS-t	MT20	5.0	8.0		
D	TMWW-t	MT20	4.0	4.0	2.00	1.50
E, F, I, J						
E	TMW+w	MT20	2.0	4.0		
G	TTW-m	MT20	5.0	6.0	2.75	3.00
H	TTW-m	MT20	5.0	6.0	2.75	3.00
K	TMWW-t	MT20	4.0	4.0	2.00	1.50
L	TS-t	MT20	5.0	8.0		
M	TMVW+p	MT20	6.0	6.0	1.75	2.25
O	BMV1+p	MT20	3.0	6.0		
P	BMWW1-t	MT20	5.0	6.0	3.00	3.00
Q	BMWW1-t	MT20	5.0	6.0	3.00	3.00
R	BS-t	MT20	8.0	10.0		
S	BMWW-t	MT20	5.0	6.0	3.00	3.00
T	BMWW-t	MT20	5.0	6.0	3.00	3.00
U	BMV1+p	MT20	3.0	6.0		
V	WMWW-t	MT20	5.0	6.0	2.25	3.00
W	WMW+w	MT20	2.0	6.0	2.00	1.25
X	WMW+w	MT20	2.0	6.0	1.50	1.00
Y	WMW+w	MT20	2.0	6.0	1.50	1.00
Z	WMW+w	MT20	2.0	6.0	2.00	1.25

HORIZONTAL REACTIONS

1ST LCASE COMBINED	MAX./MIN. COMPONENT REACTIONS SNOW	LIVE	PERM.LIVE	WIND	DEAD	SOIL
U ---	0 / 0	0 / 0	0 / 0	363 / -365	0 / 0	0 /0

BEARING MATERIAL TO BE SPF NO.2 OR BETTER AT JOINT(S) U, Q, P, O, AA

BRACING

MAX. UNBRACED TOP CHORD LENGTH = 6.25 FT.
MAX. UNBRACED BOTTOM CHORD LENGTH = 6.25 FT OR RIGID CEILING DIRECTLY APPLIED.

MAX. UNBRACED INTERIOR CHORD LENGTH = 6.25 FT OR RIGID SHEATHING TO ATTIC FLOOR AND CEILING.

ALL PITCH BREAKS AND PERIMETER CORNER JOINTS MUST BE LATERALLY RESTRAINED.

LOADING

TOTAL LOAD CASES: (18)

CHORDS

MEMB. FR-TO	MAX. FACTORED FORCE (LBS)	FACTORED VERT. LOAD (PLF) FROM	TO	LC1 CSI (LC)	MAX UNBRAC LENGTH
A- B	0 / 154	-184.9	-184.9	0.14 (2)	10.00
B- C	-2565 / 362	-184.9	-184.9	0.14 (2)	6.25
C- D	-2565 / 362	-184.9	-184.9	0.14 (2)	6.25
D- E	-2418 / 282	-184.9	-184.9	0.11 (2)	6.25
E- F	-2660 / 532	-184.9	-184.9	0.09 (2)	6.25
F- G	-1391 / 134	-184.9	-184.9	0.09 (3)	6.25
H- I	-1660 / 188	-184.9	-184.9	0.20 (2)	6.25
I- J	-2014 / 366	-184.9	-184.9	0.23 (3)	6.25
J- K	-2364 / 352	-184.9	-184.9	0.24 (3)	6.25
K- L	-1853 / 225	-184.9	-184.9	0.14 (3)	6.25
L- M	-1853 / 225	-184.9	-184.9	0.14 (3)	6.25
M- N	0 / 154	-184.9	-184.9	0.14 (3)	10.00
G- H	-1241 / 21	-184.9	-184.9	0.25 (3)	6.25
U- B	-4270 / 467	0.0	0.0	0.09 (2)	7.81
O- M	-3165 / 256	0.0	0.0	0.07 (1)	7.81
U- T	-467 / 492	-37.5	-37.5	0.09 (2)	6.25
T- S	-450 / 2008	-37.5	-37.5	0.37 (2)	6.25
S-AA	-212 / 1914	-122.5	-122.5	0.37 (2)	6.25
AA- R	-212 / 1914	-122.5	-122.5	0.35 (2)	6.25
R- Q	-212 / 1914	-122.5	-122.5	0.35 (2)	6.25
Q- P	-167 / 1441	-37.5	-37.5	0.17 (6)	6.25
P- O	-16 / 41	-37.5	-37.5	0.04 (6)	6.25
X- V	-1168 / 400	-32.5	-32.5	0.06 (2)	6.25
V- Y	-1449 / 506	-32.5	-32.5	0.04 (9)	6.25
W- X	-432 / 226	-32.5	-32.5	0.10 (5)	6.25
Y- Z	-484 / 91	-32.5	-32.5	0.10 (5)	6.25

WEBS

MEMB. FR-TO	MAX. FACTORED FORCE (LBS)	MAX CSI (LC)
S- W	-1244 / 292	0.15 (2)
W- E	-1267 / 374	0.08 (3)
Q- Z	-1692 / 408	0.15 (3)
Z- J	-1494 / 529	0.11 (2)
F- X	-1132 / 497	0.06 (2)
Y- I	-1063 / 433	0.04 (9)
T- D	-891 / 86	0.13 (3)
P- K	-1338 / 189	0.20 (1)
D- S	-154 / 639	0.07 (3)
Q- K	-50 / 659	0.07 (2)
G- V	-293 / 488	0.05 (6)
V- H	-427 / 587	0.07 (2)
B- T	-160 / 2731	0.16 (2)
P- M	-206 / 1960	0.11 (1)

TRUSS HAS BEEN CHECKED FOR UNBALANCED LOADING AS PER NBCC 4.1.6.2.(8)

WIND LOAD APPLIED IS DERIVED FROM REFERENCE VELOCITY PRESSURE OF { 7.5} PSF AT {40-0-0} FT-IN-SX REFERENCE HEIGHT ABOVE GRADE AND USING EXTERNAL PEAK COEFFICIENTS, CpCg, BASED ON THE {MAIN WIND FORCE RESISTING SYSTEM}.INTERNAL WIND PRESSURE IS BASED ON DESIGN {CATEGORY 2}. BUILDING MAY BE LOCATED ON {OPEN TERRAIN}, AND TRUSS IS DESIGNED TO BE LOCATED AT LEAST {0-0} FT-IN-SX AWAY FROM EAVE.TRUSS UPLIFT IS BASED ON TOP AND BOTTOM CHORD DEAD LOADS OF 5.0 PSF AND 5.0 PSF RESPECTIVELY.

(66 % OF 83.6 P.S.F. G.S.L. PLUS 2.1 P.S.F. RAIN LOAD) TIMES IMPORTANCE FACTOR EQUALS 57.5 P.S.F. SPECIFIED ROOF LIVE LOAD

ALLOWABLE DEFL.(LL)= L/240 (0.69")
CALCULATED VERT. DEFL.(LL) = L/ 999 (0.08")
ALLOWABLE DEFL.(TL)= L/180 (0.92")
CALCULATED VERT. DEFL.(TL) = L/ 999 (0.09")

CSI: TC=0.25/1.00 (G-H:3) , BC=0.37/1.00 (S-T:2) , WB=0.20/1.00 (K-P:1) , SSI=0.25/1.00 (S-AA:5)

DOL LUMBER=1.00 NAIL=1.00 LS BEND=1.10 COMP=1.10 SHEAR=1.10 TENS= 1.10

SNOW LOAD IMPORTANCE FACTOR = 1.00
WIND LOAD IMPORTANCE FACTOR = 1.00
LIVE LOAD IMPORTANCE FACTOR = 1.00
COMPANION LIVE LOAD FACTOR = 1.00

AUTOSOLVE HEELS OFF

TRUSS PLATE MANUFACTURER IS NOT RESPONSIBLE FOR QUALITY CONTROL IN THE TRUSS MANUFACTURING PLANT .

NAIL VALUES

PLATE	GRIP(DRY) (PSI) MAX	MIN	SHEAR (PLI) MAX	MIN	SECTION (PLI) MAX	MIN
MT20	650	371	1747	788	1987	1873

PLATE PLACEMENT TOL. = 0.250 inches

PLATE ROTATION TOL. = 5.0 Deg.

JSI GRIP= 0.84 (X) (INPUT = 0.90)
JSI METAL= 0.60 (R) (INPUT = 1.00)

JOB NAME	TRUSS NAME	QUANTITY	PLY	JOB DESC. Woodcreek / Adkins	DRWG NO.
211770	G2	1	2	TRUSS DESC.	

KAMLOOPS TRUSS LTD., Kamloops, BC V2H 1G3

Version 8.420 S Mar 22 2021 MiTek Industries, Inc. Thu May 27 07:06:26 2021 Page 1

ID:X2qvwXGfFYBXzZFl6ldjmRzCaiR-6rh50c5YAykx7cwdKYgj0shxVa7By9rTLj0tGYzCLWR

Scale = 1:75.6

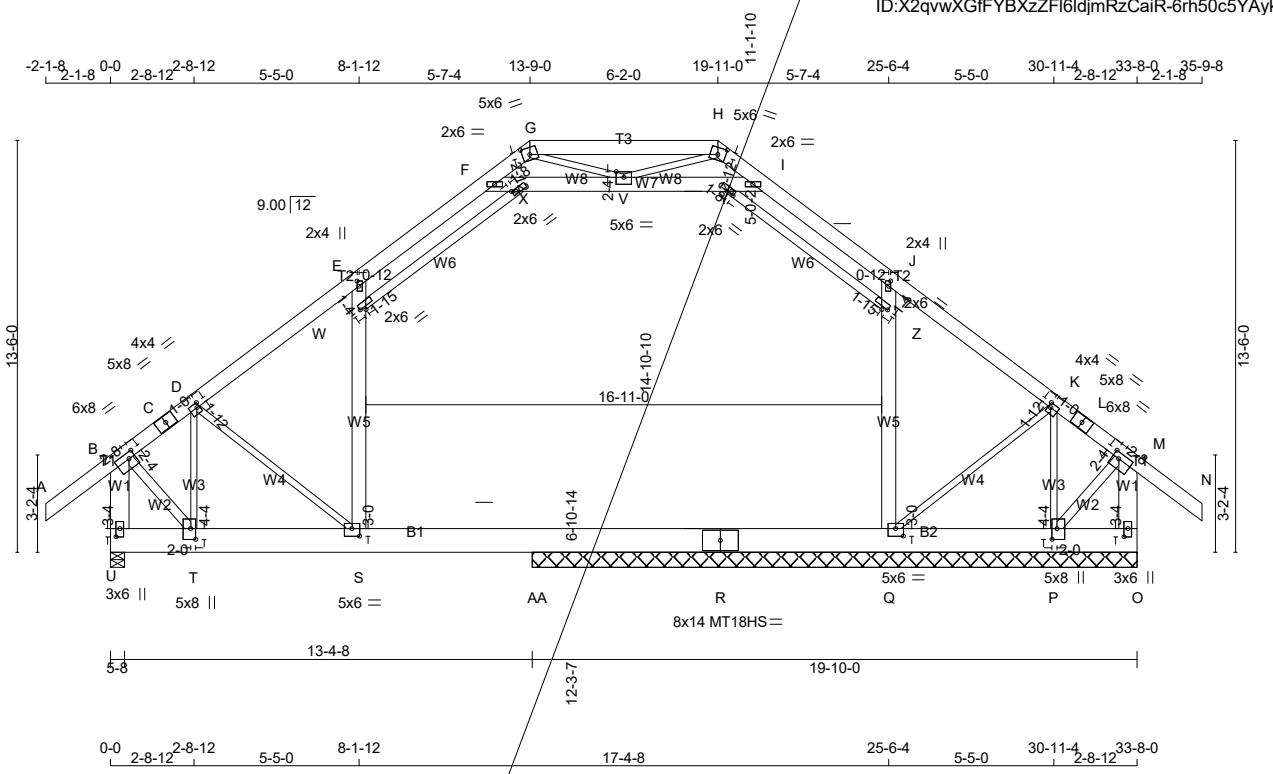

TOTAL WEIGHT = 2 X 306 = 612 lb

[M]

LUMBER

N. L. G. A. RULES

CHORDS	SIZE		LUMBER	DESCR.
A - C	2x6	DRY	1650F 1.5E	SPF
C - G	2x6	DRY	1650F 1.5E	SPF
H - L	2x6	DRY	1650F 1.5E	SPF
L - N	2x6	DRY	1650F 1.5E	SPF
G - H	2x6	DRY	1650F 1.5E	SPF
U - B	2x8	DRY	1950F 1.7E	DF

DIMENSIONS, SUPPORTS AND LOADINGS SPECIFIED BY FABRICATOR TO BE VERIFIED BY BUILDING DESIGNER

BEARINGS

JT	FACTORED GROSS REACTION VERT	HORZ	MAXIMUM FACTORED GROSS REACTION DOWN	HORZ	UPLIFT	INPUT BRG IN-SX	REQRD BRG IN-SX
U	8820	0	9200	-511	0	5-8	5-0
Q	3791	0	4761	0	0	19-10-0 (13-8-0)	5-0
P	721	0	920	0	-167	19-10-0 (13-8-0)	5-0
O	7211	0	7211	0	0	19-10-0 (13-8-0)	5-0
AA	5341	0	5652	0	0	19-10-0 (13-8-0)	5-0

VALUE IN PARENTHESIS INDICATES EFFECTIVE BEARING LENGTH

PROVIDE ANCHORAGE AT BEARING JOINT P FOR 167 LBS FACTORED UPLIFT

PROVIDE FOR 511 LBS FACTORED HORIZONTAL REACTION AT JOINT U

UNFACTORED REACTIONS

JT	1ST LCASE COMBINED	MAX./MIN. COMPONENT REACTIONS SNOW	LIVE	PERM.LIVE	WIND	DEAD	SOIL
U	6202	4845 / 0	325 / 0	0 / 0	200 / -487	1285 / 0	0 / 0
Q	2866	2121 / 0	642 / 0	0 / 0	317 / -344	749 / 0	0 / 0
P	448	488 / 0	0 / -158	0 / 0	104 / -188	118 / 0	0 / 0
O	5072	3780 / 0	297 / 0	0 / 0	209 / -326	996 / 0	0 / 0
AA	4063	2213 / 0	957 / 0	0 / 0	189 / -295	1101 / 0	0 / 0

HORIZONTAL REACTIONS

U	---	0 / 0	0 / 0	0 / 0	363 / -365	0 / 0	0 /0

BEARING MATERIAL TO BE SPF NO.2 OR BETTER AT JOINT(S) U, Q, P, O, AA

DESIGN CRITERIA

*** SPECIAL LOADS ANALYSIS ***
GEOMETRY AND/OR BASIC LOADS CHANGED BY USER.
LOADS WERE DERIVED FROM USER INPUT
NO FURTHER MODIFICATIONS WERE MADE

SPECIFIED LOADS:

TOP CH.	LL	=	57.5	PSF
	DL	=	5.0	PSF
BOT CH.	LL	=	10.0	PSF
	DL	=	7.0	PSF
TOTAL LOAD		=	79.5	PSF
ATTIC FLOOR		=	40.0	PSF
	DL	=	10.0	PSF
CEILING	DL	=	5.0	PSF

SPACING = 24.0 IN. C/C

LOADING IN FLAT SECTION BASED ON A SLOPE OF 9.00/12

*** NON STANDARD GIRDER ***
ADDT'L USER-DEFINED LOADS APPLIED TO ALL LOAD CASES.

THIS TRUSS IS DESIGNED FOR COMMERCIAL OR INDUSTRIAL BUILDING REQUIREMENTS OF PART 4, NBCC 2015

THIS DESIGN COMPLIES WITH:

CONTINUED ON PAGE 2

JOB NAME	TRUSS NAME	QUANTITY	PLY	JOB DESC. Woodcreek / Adkins	DRWG NO.
211770	G2	1	2	TRUSS DESC.	

KAMLOOPS TRUSS LTD., Kamloops, BC V2H 1G3

Version 8.420 S Mar 22 2021 MiTek Industries, Inc. Thu May 27 07:06:27 2021 Page 2

ID:X2qvwXGfFYBXzZFl6ldjmRzCaiR-a2ETEy6AxGsollUpuFCyZ3E6F_TQhc5caNmQo_zCLWQ

DRY: SEASONED LUMBER.

DESIGN CONSISTS OF **2** TRUSSES BUILT SEPARATELY THEN FASTENED TOGETHER AS FOLLOWS:

CHORDS	#ROWS	SURFACE SPACING (IN)	LOAD(PLF)
TOP CHORDS : (0.122"X3") SPIRAL NAILS			
A- C	2	12	SIDE(92.0)
C- G	2	12	SIDE(92.0)
L- H	2	12	SIDE(92.0)
N- L	2	12	SIDE(92.0)
G- H	2	12	SIDE(115.0)
U- B	2	12	TOP
O- M	2	12	TOP
BOTTOM CHORDS : (0.122"X3") SPIRAL NAILS			
U- R	3	12	SIDE(100.0)
R- O	3	12	SIDE(100.0)
WEBS : (0.122"X3") SPIRAL NAILS			
2x3	1	6	
2x4	1	6	
2x6	2	6	

NAILS TO BE DRIVEN FROM ONE SIDE ONLY.

TOP - COMPONENTS ARE LOADED FROM THE TOP AND MUST BE PLACED ON TOP EDGE OF ALL PLIES FOR THE LOAD TO BE TRANSFERRED TO EACH PLY.

SIDE - PLF SHOWN IS THE EQUIVALENT UDL APPLIED TO ONE SIDE THAT THE CORRESPONDING NAILING PATTERN SHALL BE CAPABLE OF TRANSFERING. REMAINING PLF MUST BE APPLIED ON THE OPPOSITE SIDE OR ON THE TOP.

PLATES (table is in inches)

JT	TYPE	PLATES	W	LEN	Y	X
B	TMVW-t	MT20	6.0	8.0	2.25	2.50
C	TS-t	MT20	5.0	8.0		
D	TMWW-t	MT20	4.0	4.0	1.75	1.00
E	TMW+w	MT20	2.0	4.0	2.00	0.75
F	TMW+w	MT20	2.0	6.0		
G	TTW-m	MT20	5.0	6.0	2.75	3.00
H	TTW-m	MT20	5.0	6.0	2.75	3.00
I	TMW+w	MT20	2.0	6.0		
J	TMW+w	MT20	2.0	4.0	2.00	0.75
K	TMWW-t	MT20	4.0	4.0	1.75	1.00
L	TS-t	MT20	5.0	8.0		
M	TMVW-t	MT20	6.0	8.0	2.25	2.50
O	BMV1+p	MT20	3.0	6.0	3.25	1.50
P	BMWW1+t	MT20	5.0	8.0	4.25	2.00
Q	BMWW1-t	MT20	5.0	6.0	3.00	3.00
R	BS-t	MT18HS	8.0	14.0		
S	BMWW-t	MT20	5.0	6.0	3.00	3.00
T	BMWW+t	MT20	5.0	8.0	4.25	2.00
U	BMV1+p	MT20	3.0	6.0	3.25	1.50
V	WMWW-t	MT20	5.0	6.0	2.25	3.00
W	WMW+w	MT20	2.0	6.0	2.00	1.25
X	WMW+w	MT20	2.0	6.0	1.50	1.00
Y	WMW+w	MT20	2.0	6.0	1.50	1.00
Z	WMW+w	MT20	2.0	6.0	2.00	1.25

BRACING

MAX. UNBRACED TOP CHORD LENGTH = 5.08 FT.
MAX. UNBRACED BOTTOM CHORD LENGTH = 6.25 FT OR RIGID CEILING DIRECTLY APPLIED.

MAX. UNBRACED INTERIOR CHORD LENGTH = 6.25 FT OR RIGID SHEATHING TO ATTIC FLOOR AND CEILING.

ALL PITCH BREAKS AND PERIMETER CORNER JOINTS MUST BE LATERALLY RESTRAINED.

LOADING

TOTAL LOAD CASES: (18)

CHORDS

MEMB. FR-TO	MAX. FACTORED FORCE (LBS)	FROM	TO	LC1	MAX CSI (LC)	MAX. UNBRAC LENGTH
A- B	0 / 310	-414.9	-414.9	0.31 (2)	10.00	
B- C	-5925 / 0	-414.9	-414.9	0.32 (2)	5.08	
C- D	-5925 / 0	-414.9	-414.9	0.32 (2)	5.08	
D- E	-5275 / 0	-414.9	-414.9	0.30 (2)	5.36	
E- F	-5549 / 69	-414.9	-414.9	0.27 (3)	5.43	
F- G	-2389 / 0	-414.9	-414.9	0.26 (3)	6.25	
H- I	-2666 / 34	-414.9	-414.9	0.38 (2)	6.25	
I- J	-4291 / 7	-414.9	-414.9	0.39 (2)	5.68	
J- K	-5083 / 0	-414.9	-414.9	0.37 (3)	5.52	
K- L	-4009 / 0	-414.9	-414.9	0.31 (3)	5.94	
L- M	-4009 / 0	-414.9	-414.9	0.31 (3)	5.94	
M- N	0 / 310	-414.9	-414.9	0.31 (3)	10.00	
G- H	-1775 / 0	-414.9	-414.9	0.56 (3)	6.25	
U- B	-9607 / 0	0.0	0.0	0.22 (2)	6.59	
O- M	-6901 / 0	0.0	0.0	0.16 (1)	7.48	
U- T	-467 / 492	-237.5	-237.5	0.24 (2)	6.25	
T- S	-14 / 4673	-237.5	-237.5	0.91 (2)	6.25	
S-AA	0 / 4118	-322.5	-322.5	0.91 (2)	10.00	
AA- R	0 / 4118	-322.5	-322.5	0.91 (2)	10.00	
R- Q	0 / 4118	-322.5	-322.5	0.91 (2)	10.00	
Q- P	0 / 3123	-237.5	-237.5	0.34 (3)	10.00	
P- O	-16 / 41	-237.5	-237.5	0.04 (6)	6.25	
X- V	-2776 / 138	-32.5	-32.5	0.10 (2)	6.25	
V- Y	-3041 / 246	-32.5	-32.5	0.11 (2)	6.25	
W- X	-200 / 457	-32.5	-32.5	0.12 (5)	6.25	
Y- Z	-931 / 20	-32.5	-32.5	0.14 (2)	6.25	

WEBS

MEMB. FR-TO	MAX. FACTORED FORCE (LBS)	MAX CSI (LC)
S- W	-2049 / 173	0.36 (2)
W- E	-2180 / 235	0.15 (2)
Q- Z	-2755 / 245	0.42 (3)
Z- J	-2327 / 287	0.15 (2)
F- X	-2925 / 201	0.10 (2)
Y- I	-2299 / 231	0.10 (2)
T- D	-1184 / 59	0.18 (3)
P- K	-2954 / 0	0.47 (1)
D- S	-648 / 298	0.28 (2)
Q- K	0 / 1306	0.16 (2)
G- V	-358 / 441	0.05 (6)
V- H	-510 / 514	0.06 (5)
B- T	0 / 6355	0.41 (2)
P- M	0 / 4247	0.27 (1)

TRUSS HAS BEEN CHECKED FOR UNBALANCED LOADING AS PER NBCC 4.1.6.2.(8)

WIND LOAD APPLIED IS DERIVED FROM REFERENCE VELOCITY PRESSURE OF { 7.5} PSF AT {40-0-0} FT-IN-SX REFERENCE HEIGHT ABOVE GRADE AND USING EXTERNAL PEAK COEFFICIENTS, CpCg, BASED ON THE {MAIN WIND FORCE RESISTING SYSTEM}.INTERNAL WIND PRESSURE IS BASED ON DESIGN {CATEGORY 2}. BUILDING MAY BE LOCATED ON {OPEN TERRAIN}, AND TRUSS IS DESIGNED TO BE LOCATED AT LEAST {0-0} FT-IN-SX AWAY FROM EAVE.TRUSS UPLIFT IS BASED ON TOP AND BOTTOM CHORD DEAD LOADS OF 5.0 PSF AND 5.0 PSF RESPECTIVELY.

- PART 4 OF BCBC 2018 , ABC 2019
- PART 4 OF OBC 2012 (2019 AMENDMENT)
- CSA 086-14
- TPIC 2014

DESIGN ASSUMPTIONS
- SLOPE REDUCTION FACTOR USED
-OVERHANG NOT TO BE ALTERED OR CUT OFF.

(66 % OF 83.6 P.S.F. G.S.L. PLUS 2.1 P.S.F. RAIN LOAD) TIMES IMPORTANCE FACTOR EQUALS 57.5 P.S.F. SPECIFIED ROOF LIVE LOAD

ALLOWABLE DEFL.(LL)= L/240 (0.69")
CALCULATED VERT. DEFL.(LL) = L/ 963 (0.17")
ALLOWABLE DEFL.(TL)= L/180 (0.92")
CALCULATED VERT. DEFL.(TL) = L/ 739 (0.22")

CSI: TC=0.56/1.00 (G-H:3) , BC=0.91/1.00 (S-T:2) , WB=0.47/1.00 (K-P:1) , SSI=0.66/1.00 (S-AA:2)

DOL LUMBER=1.00 NAIL=1.00 LS BEND=1.00 COMP=1.00 SHEAR=1.00 TENS= 1.00

SNOW LOAD IMPORTANCE FACTOR = 1.00
WIND LOAD IMPORTANCE FACTOR = 1.00
LIVE LOAD IMPORTANCE FACTOR = 1.00
COMPANION LIVE LOAD FACTOR = 1.00

AUTOSOLVE HEELS OFF

TRUSS PLATE MANUFACTURER IS NOT RESPONSIBLE FOR QUALITY CONTROL IN THE TRUSS MANUFACTURING PLANT .

NAIL VALUES

PLATE	GRIP(DRY) (PSI) MAX	MIN	SHEAR (PLI) MAX	MIN	SECTION (PLI) MAX	MIN
MT20	650	371	1747	788	1987	1873
MT18HS	586	403	2455	1382	3163	3004

PLATE PLACEMENT TOL. = 0.250 inches

PLATE ROTATION TOL. = 5.0 Deg.

JSI GRIP= 0.87 (B) (INPUT = 0.90)
JSI METAL= 0.93 (R) (INPUT = 1.00)

JOB NAME	TRUSS NAME	QUANTITY	PLY	JOB DESC.	DRWG NO.
211770	G3	2	3	Woodcreek / Adkins TRUSS DESC.	

KAMLOOPS TRUSS LTD., Kamloops, BC V2H 1G3

Version 8.420 S Mar 22 2021 MiTek Industries, Inc. Thu May 27 07:06:29 2021 Page 1

ID:5X2qvwXGfFYBXzZFl6ldjmRzCaiR-WQMEee8QTt6V_3eC0gEQeUJQAnAo9WFv1hFXstzCLWO

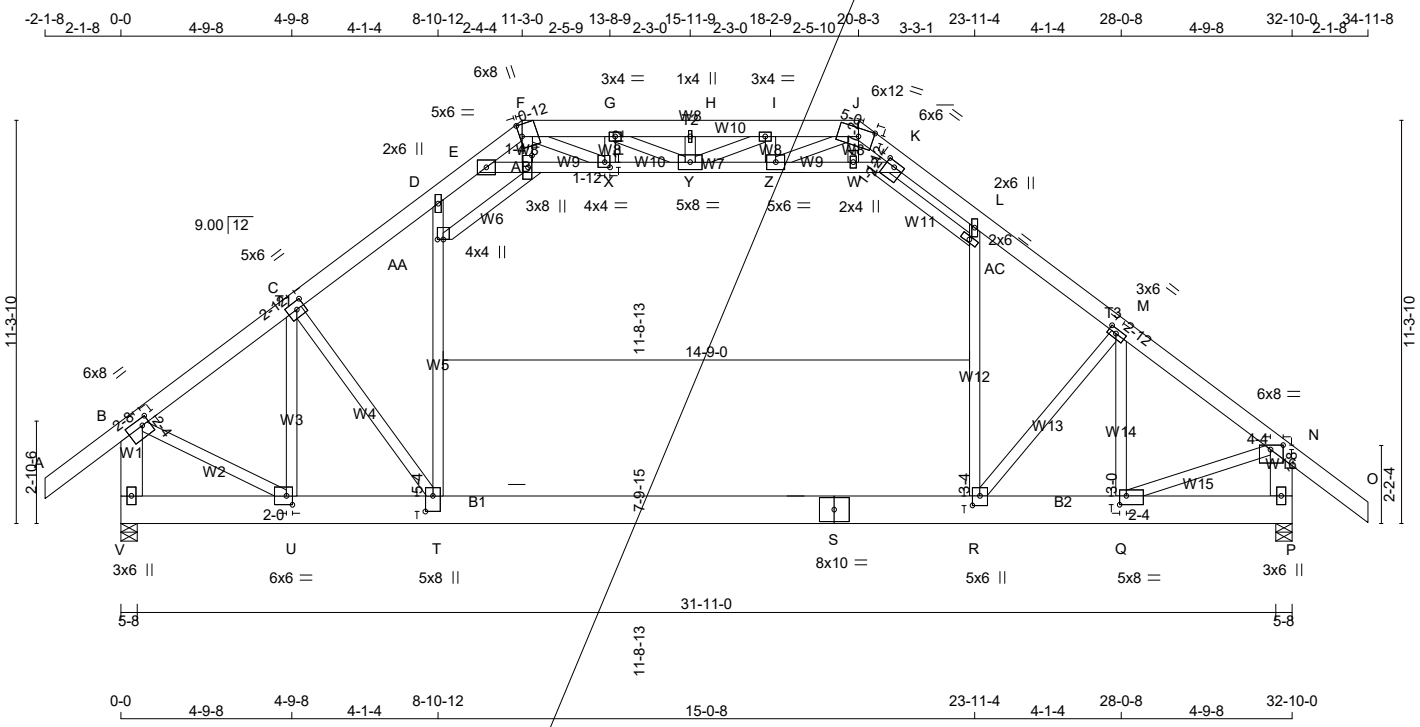

TOTAL WEIGHT = 6 X 295 = 1771 lb

[M]

LUMBER

N. L. G. A. RULES

CHORDS	SIZE		LUMBER	DESCR.
A - F	2x6	DRY	1650F 1.5E	SPF
J - O	2x6	DRY	1650F 1.5E	SPF
F - J	2x6	DRY	1650F 1.5E	SPF
V - B	2x8	DRY	1950F 1.7E	DF
P - N	2x8	DRY	1950F 1.7E	DF
V - S	2x10	DRY	SS	DF

DIMENSIONS, SUPPORTS AND LOADINGS SPECIFIED BY FABRICATOR TO BE VERIFIED BY BUILDING DESIGNER

BEARINGS

JT	FACTORED GROSS REACTION VERT	HORZ	MAXIMUM FACTORED GROSS REACTION DOWN	HORZ	UPLIFT	INPUT BRG	REQRD BRG
V	14092	0	14239	-219	0	5-8	5-2
P	14092	0	14274	0	0	5-8	5-2

PROVIDE FOR 219 LBS FACTORED HORIZONTAL REACTION AT JOINT V

UNFACTORED REACTIONS

JT	1ST LCASE COMBINED	SNOW	MAX./MIN. COMPONENT REACTIONS LIVE	PERM.LIVE	WIND	DEAD	SOIL
V	9954	7161 / 0	465 / 0	0 / 0	141 / -338	2427 / 0	0 / 0
P	9954	7184 / 0	465 / 0	0 / 0	91 / -341	2427 / 0	0 / 0
HORIZONTAL REACTIONS							
V	---	0 / 0	0 / 0	0 / 0	151 / -156	0 / 0	0 /0

BEARING MATERIAL TO BE SPF NO.2 OR BETTER AT JOINT(S) V, P

BRACING

MAX. UNBRACED TOP CHORD LENGTH = 3.88 FT.
MAX. UNBRACED BOTTOM CHORD LENGTH = 6.25 FT OR RIGID CEILING DIRECTLY APPLIED.

MAX. UNBRACED INTERIOR CHORD LENGTH = 4.04 FT OR RIGID SHEATHING TO ATTIC FLOOR AND CEILING.

ALL PITCH BREAKS AND PERIMETER CORNER JOINTS MUST BE LATERALLY RESTRAINED.

DESIGN CRITERIA

*** SPECIAL LOADS ANALYSIS ***
GEOMETRY AND/OR BASIC LOADS CHANGED BY USER.
LOADS WERE DERIVED FROM USER INPUT
NO FURTHER MODIFICATIONS WERE MADE

SPECIFIED LOADS:

TOP CH.	LL	=	57.5	PSF
	DL	=	5.0	PSF
BOT CH.	LL	=	10.0	PSF
	DL	=	7.0	PSF
TOTAL LOAD		=	79.5	PSF
ATTIC FLOOR		=	40.0	PSF
	DL	=	10.0	PSF
CEILING	DL	=	5.0	PSF

SPACING = 12.0 IN. C/C

LOADING IN FLAT SECTION BASED ON A SLOPE OF 9.00/12

*** NON STANDARD GIRDER ***
ADDT'L USER-DEFINED LOADS APPLIED TO ALL LOAD CASES.

THIS TRUSS IS DESIGNED FOR COMMERCIAL OR INDUSTRIAL BUILDING REQUIREMENTS OF PART 4, NBCC 2015

THIS DESIGN COMPLIES WITH:

CONTINUED ON PAGE 2

JOB NAME	TRUSS NAME	QUANTITY	PLY	JOB DESC. Woodcreek / Adkins	DRWG NO.
211770	G3	2	3	TRUSS DESC.	

DRY: SEASONED LUMBER.

DESIGN CONSISTS OF 3 TRUSSES BUILT SEPARATELY THEN FASTENED TOGETHER AS FOLLOWS:

CHORDS	#ROWS	SURFACE SPACING (IN)	LOAD(PLF)
TOP CHORDS : (0.122"X3") SPIRAL NAILS			
A- F	2	12	SIDE(184.0)
O- J	2	12	SIDE(194.8)
F- J	2	12	SIDE(230.0)
V- B	2	12	TOP
P- N	2	12	TOP
BOTTOM CHORDS : (0.122"X3") SPIRAL NAILS			
V- S	3	12	SIDE(210.0)
S- P	3	12	SIDE(210.0)
WEBS : (0.122"X3") SPIRAL NAILS			
2x4	1	6	

STAGGER NAILS BY HALF THE SURFACE SPACING IN ADJACENT PLIES.

TOP - COMPONENTS ARE LOADED FROM THE TOP AND MUST BE PLACED ON TOP EDGE OF ALL PLIES FOR THE LOAD TO BE TRANSFERRED TO EACH PLY.

SIDE - PLF SHOWN IS THE EQUIVALENT UDL APPLIED TO ONE SIDE THAT THE CORRESPONDING NAILING PATTERN SHALL BE CAPABLE OF TRANSFERING. REMAINING PLF MUST BE APPLIED ON THE OPPOSITE SIDE OR ON THE TOP.

PLATES (table is in inches)

JT	TYPE	PLATES	W	LEN	Y	X
B	TMVW-t	MT20	6.0	8.0	2.25	2.50
C	TMWW-t	MT20	5.0	6.0	2.50	2.75
D	TMW+w	MT20	2.0	6.0		
E	TMW+w	MT20	5.0	6.0		
F	TTWW+m	MT20	6.0	8.0	4.00	0.75
G	TMWW-t	MT20	3.0	4.0		
H	TMW+w	MT20	1.0	4.0		
I	TMWW-t	MT20	3.0	4.0		
J	TTWW-m	MT20	6.0	12.0	2.75	5.00
K	TMWW-t	MT20	6.0	6.0	1.75	3.00
L	TMW+w	MT20	2.0	6.0		
M	TMWW-t	MT20	3.0	6.0	1.50	2.75
N	TMVW-p	MT20	6.0	8.0	1.50	4.25
P	BMV1+p	MT20	3.0	6.0		
Q	BMWW-t	MT20	5.0	8.0	3.00	2.25
R	BMWW+t	MT20	5.0	6.0	3.25	2.50
S	BS-t	MT20	8.0	10.0		
T	BMWW+t	MT20	5.0	8.0	5.25	2.50
U	BMWW-t	MT20	6.0	6.0	3.00	2.00
V	BMV1+p	MT20	3.0	6.0		
W	WMW+w	MT20	2.0	4.0		
X	WMWW-t	MT20	4.0	4.0	1.75	1.75
Y	WMWWW-t	MT20	5.0	8.0		
Z	WMWW-t	MT20	5.0	6.0		
AA	WMW-t	MT20	4.0	4.0	2.00	
AB	WMWW+t	MT20	3.0	8.0	4.00	1.25
AC	WMW+w	MT20	2.0	6.0		

LOADING
TOTAL LOAD CASES: (18)

CHORDS

MEMB. FR-TO	MAX. FORCE (LBS)	FACTORED VERT. LOAD (PLF) FROM	TO	LC1 MAX CSI (LC)	MAX. UNBRAC LENGTH
A- B	0 / 311	-437.5	-437.5	0.19 (2)	10.00
B- C	-11558 / 0	-437.5	-437.5	0.25 (2)	4.71
C- D	-13450 / 0	-437.5	-437.5	0.37 (2)	4.31
D- E	-10663 / 0	-437.5	-437.5	0.59 (3)	4.30
E- F	-2577 / 0	-437.5	-437.5	0.57 (3)	6.25
J- K	-2609 / 0	-437.5	-437.5	0.62 (2)	6.25
K- L	-12696 / 0	-437.5	-437.5	0.66 (2)	3.88
L- M	-13786 / 0	-437.5	-437.5	0.56 (3)	3.96
M- N	-13281 / 0	-437.5	-437.5	0.31 (3)	4.40
N- O	0 / 311	-437.5	-437.5	0.19 (3)	10.00
F- G	-4309 / 0	-437.5	-437.5	0.05 (1)	6.25
G- H	-4599 / 0	-437.5	-437.5	0.05 (3)	6.25
H- I	-4599 / 0	-437.5	-437.5	0.06 (1)	6.25
I- J	-3765 / 0	-437.5	-437.5	0.06 (1)	6.25
V- B	-13181 / 0	0.0	0.0	0.17 (2)	6.86
P- N	-13298 / 0	0.0	0.0	0.14 (3)	6.84
V- U	-193 / 210	-333.8	-333.8	0.14 (3)	6.25
U- T	0 / 9384	-333.8	-333.8	0.77 (3)	10.00
T- S	0 / 10372	-376.2	-376.2	0.79 (3)	10.00
S- R	0 / 10372	-376.2	-376.2	0.79 (3)	10.00
R- Q	0 / 10788	-333.8	-333.8	0.44 (2)	10.00
Q- P	-5 / 12	-333.8	-333.8	0.12 (2)	10.00
AB- X	-9836 / 0	-16.2	-16.2	0.15 (3)	4.28
X- Y	-6542 / 0	-16.2	-16.2	0.04 (3)	5.16
Y- Z	-7056 / 0	-16.2	-16.2	0.05 (1)	5.01
Z- W	-10918 / 0	-16.2	-16.2	0.17 (2)	4.09
W- K	-11191 / 0	-16.2	-16.2	0.17 (2)	4.04
AA-AB	0 / 708	-16.2	-16.2	0.03 (2)	10.00
K-AC	0 / 2232	-16.2	-16.2	0.09 (3)	10.00

WEBS

MEMB. FR-TO	MAX. FORCE (LBS)	MAX CSI (LC)
T-AA	0 / 4589	0.21 (3)
AA- D	0 / 4295	0.20 (3)
R-AC	0 / 4429	0.39 (3)
AC- L	0 / 3274	0.34 (3)
E-AB	-10389 / 0	0.16 (3)
U- C	-5463 / 0	0.49 (3)
C- T	0 / 2435	0.09 (3)
B- U	0 / 10319	0.40 (2)
Q- M	-3241 / 0	0.22 (2)
R- M	-793 / 282	0.09 (10)
Q- N	0 / 11315	0.44 (3)
W- J	0 / 1485	0.06 (1)
AB- F	0 / 784	0.03 (2)
X- G	-1641 / 0	0.03 (3)
Y- H	-612 / 0	0.01 (2)
Z- I	-1906 / 0	0.04 (2)
F- X	0 / 3847	0.15 (3)
G- Y	-39 / 592	0.02 (3)
Y- I	0 / 1142	0.04 (2)
Z- J	0 / 4499	0.17 (2)

TRUSS HAS BEEN CHECKED FOR UNBALANCED LOADING AS PER NBCC 4.1.6.2.(8)

WIND LOAD APPLIED IS DERIVED FROM REFERENCE VELOCITY PRESSURE OF { 7.5} PSF AT {40-0-0} FT-IN-SX REFERENCE HEIGHT ABOVE GRADE AND USING EXTERNAL PEAK COEFFICIENTS, CpCg, BASED ON THE {MAIN WIND FORCE RESISTING SYSTEM}.INTERNAL WIND PRESSURE IS BASED ON DESIGN {CATEGORY 2}. BUILDING MAY BE LOCATED ON {OPEN TERRAIN}, AND TRUSS IS DESIGNED TO BE LOCATED AT LEAST {0-0} FT-IN-SX AWAY FROM EAVE.TRUSS UPLIFT IS BASED ON TOP AND BOTTOM CHORD DEAD LOADS OF 5.0 PSF AND 5.0 PSF RESPECTIVELY.

- PART 4 OF BCBC 2018 , ABC 2019
- PART 4 OF OBC 2012 (2019 AMENDMENT)
- CSA 086-14
- TPIC 2014

DESIGN ASSUMPTIONS
- SLOPE REDUCTION FACTOR USED

(66 % OF 83.6 P.S.F. G.S.L. PLUS 2.1 P.S.F. RAIN LOAD) TIMES IMPORTANCE FACTOR EQUALS 57.5 P.S.F. SPECIFIED ROOF LIVE LOAD

ALLOWABLE DEFL.(LL)= L/240 (1.64")
CALCULATED VERT. DEFL.(LL) = L/ 999 (0.29")
ALLOWABLE DEFL.(TL)= L/180 (2.19")
CALCULATED VERT. DEFL.(TL) = L/ 966 (0.41")

CSI: TC=0.66/1.00 (K-L:2) , BC=0.79/1.00 (R-T:3) , WB=0.49/1.00 (C-U:3) , SSI=0.82/1.00 (D-E:1)

DOL LUMBER=1.00 NAIL=1.00 LS BEND=1.10 COMP=1.10 SHEAR=1.10 TENS= 1.10

SNOW LOAD IMPORTANCE FACTOR = 1.00
WIND LOAD IMPORTANCE FACTOR = 1.00
LIVE LOAD IMPORTANCE FACTOR = 1.00
COMPANION LIVE LOAD FACTOR = 1.00

AUTOSOLVE HEELS OFF

TRUSS PLATE MANUFACTURER IS NOT RESPONSIBLE FOR QUALITY CONTROL IN THE TRUSS MANUFACTURING PLANT .

NAIL VALUES

PLATE	GRIP(DRY) (PSI) MAX	MIN	SHEAR (PLI) MAX	MIN	SECTION (PLI) MAX	MIN
MT20	650	371	1747	788	1987	1873

PLATE PLACEMENT TOL. = 0.250 inches

PLATE ROTATION TOL. = 5.0 Deg.

JSI GRIP= 0.89 (Q) (INPUT = 0.90)
JSI METAL= 0.94 (S) (INPUT = 1.00)

JOB NAME	TRUSS NAME	QUANTITY	PLY	JOB DESC. Woodcreek / Adkins	DRWG NO.
211770	G4	1	4	TRUSS DESC.	

KAMLOOPS TRUSS LTD., Kamloops, BC V2H 1G3

Version 8.420 S Mar 22 2021 MiTek Industries, Inc. Thu May 27 07:06:32 2021 Page 1

ID:X2qvwXGfFYBXzZFl6ldjmRzCaiR-w?2MHgAJmoV4rXNnhon7G7x_X?9RMoFLjfTBTCzCLWL

Scale: 3/16"=1'

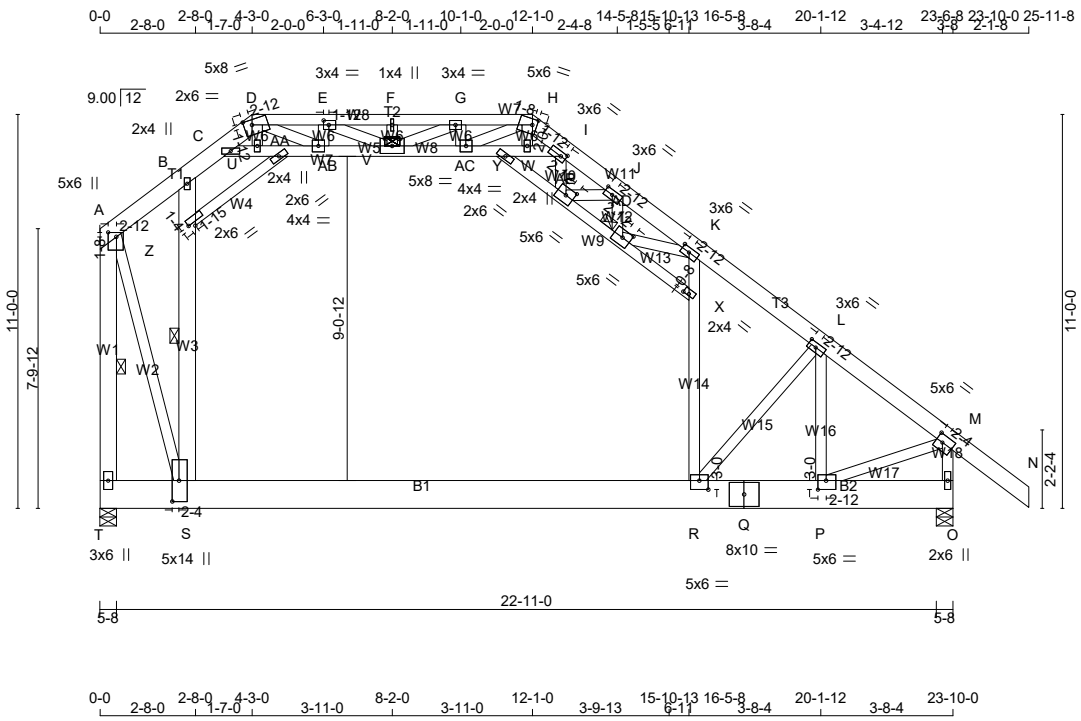

LUMBER

N. L. G. A. RULES

CHORDS	SIZE		LUMBER	DESCR.
A - D	2x6	DRY	2400F 2.0E	DF
D - H	2x4	DRY	1650F 1.5E	SPF
H - N	2x6	DRY	2400F 2.0E	DF
T - A	2x6	DRY	1650F 1.5E	SPF
O - M	2x4	DRY	1650F 1.5E	SPF
T - Q	2x10	DRY	SS	DF

DIMENSIONS, SUPPORTS AND LOADINGS SPECIFIED BY FABRICATOR TO BE VERIFIED BY BUILDING DESIGNER

BEARINGS

JT	FACTORED GROSS REACTION VERT	HORZ	MAXIMUM FACTORED GROSS REACTION DOWN	HORZ	UPLIFT	INPUT BRG	REQRD BRG
T	8891	0	8891	-167	0	5-8	2-7
O	9839	0	10008	0	0	5-8	3-8

PROVIDE FOR 167 LBS FACTORED HORIZONTAL REACTION AT JOINT T

UNFACTORED REACTIONS

JT	1ST LCASE COMBINED	MAX./MIN. COMPONENT REACTIONS SNOW	LIVE	PERM.LIVE	WIND	DEAD	SOIL
T	6208	4604 / 0	79 / 0	0 / 0	42 / -155	1525 / 0	0 / 0
O	6864	5228 / 0	79 / 0	0 / 0	51 / -170	1669 / 0	0 / 0

HORIZONTAL REACTIONS

T	---	0 / 0	0 / 0	0 / 0	88 / -119	0 / 0	0 /0

BEARING MATERIAL TO BE SPF NO.2 OR BETTER AT JOINT(S) T, O

DESIGN CRITERIA

*** SPECIAL LOADS ANALYSIS ***
GEOMETRY AND/OR BASIC LOADS CHANGED BY USER.
LOADS WERE DERIVED FROM USER INPUT
NO FURTHER MODIFICATIONS WERE MADE

SPECIFIED LOADS:

TOP CH.	LL	=	57.5	PSF
	DL	=	5.0	PSF
BOT CH.	LL	=	10.0	PSF
	DL	=	7.0	PSF
TOTAL LOAD		=	79.5	PSF

SPACING = 8.0 IN. C/C

LOADING IN FLAT SECTION BASED ON A SLOPE OF 9.00/12

*** NON STANDARD GIRDER ***
ADDT'L USER-DEFINED LOADS APPLIED TO ALL LOAD CASES.

THIS TRUSS IS DESIGNED FOR COMMERCIAL OR INDUSTRIAL BUILDING REQUIREMENTS OF PART 4, NBCC 2015

THIS DESIGN COMPLIES WITH:
- PART 4 OF BCBC 2018 , ABC 2019
- PART 4 OF OBC 2012 (2019 AMENDMENT)
- CSA 086-14
- TPIC 2014

CONTINUED ON PAGE 2

JOB NAME	TRUSS NAME	QUANTITY	PLY	JOB DESC. Woodcreek / Adkins	DRWG NO.
211770	G4	1	4	TRUSS DESC.	

KAMLOOPS TRUSS LTD., Kamloops, BC V2H 1G3

ID:X2qvwXGfFYBXzZFl6ldjmRzCaiR-w?2MHgAJmoV4rXNnhon7G7x_X?9RMoFLjfTBTCzCLWL

DRY: SEASONED LUMBER.

DESIGN CONSISTS OF 4 TRUSSES BUILT SEPARATELY THEN FASTENED TOGETHER AS FOLLOWS:

CHORDS	#ROWS	SURFACE SPACING (IN)	LOAD(PLF)
TOP CHORDS : (0.122"X3") SPIRAL NAILS			
A- D	2	12	SIDE(214.2)
H- N	2	12	SIDE(214.2)
T- A	2	12	TOP
D- H	1	4	SIDE(267.8)
O- M	1	12	TOP
BOTTOM CHORDS : (0.122"X3") SPIRAL NAILS			
T- Q	3	12	SIDE(236.3)
Q- O	3	12	SIDE(236.3)
WEBS : (0.122"X3") SPIRAL NAILS			
2x4	1	6	
2x6	2	6	

STAGGER NAILS BY HALF THE SURFACE SPACING IN ADJACENT PLIES.

IN ADDITION, PRE-DRILL ONE 0.56" DIAM. HOLE IN EACH CHORD PANEL AND INSTALL 0.50" DIAM. ASTM A307 BOLTS WITH WASHERS, BOTH SIDES. FOR OTHER BOLT TYPES SEE CSAO86 3.3.2.

TOP - COMPONENTS ARE LOADED FROM THE TOP AND MUST BE PLACED ON TOP EDGE OF ALL PLIES FOR THE LOAD TO BE TRANSFERRED TO EACH PLY.

SIDE - PLF SHOWN IS THE EQUIVALENT UDL APPLIED TO ONE SIDE THAT THE CORRESPONDING NAILING PATTERN SHALL BE CAPABLE OF TRANSFERING. REMAINING PLF MUST BE APPLIED ON THE OPPOSITE SIDE OR ON THE TOP.

PLATES (table is in inches)

JT	TYPE	PLATES	W	LEN	Y	X
A	TMVW+p	MT20	5.0	6.0	1.50	2.75
B	TMW+w	MT20	2.0	4.0		
C	TMW+w	MT20	2.0	6.0		
D	TTWW-m	MT20	5.0	8.0	1.75	2.75
E	TMWW-t	MT20	3.0	4.0	1.50	1.75
F	TMW+w	MT20	1.0	4.0		
G	TMWW-t	MT20	3.0	4.0		
H	TTWW-m	MT20	5.0	6.0	2.00	1.50
I	TMWW-t	MT20	3.0	6.0	1.50	1.75
J, K, L						
J	TMWW-t	MT20	3.0	6.0	1.50	2.75
M	TMVW-t	MT20	5.0	6.0	2.50	2.25
O	BMV1+p	MT20	2.0	6.0		
P	BMWW-t	MT20	5.0	6.0	3.00	2.75
Q	BS-t	MT20	8.0	10.0		
R	BMWW-t	MT20	5.0	6.0	3.00	3.00
S	BMWW+t	MT20	5.0	14.0	7.00	2.25
T	BMV1+p	MT20	3.0	6.0		
U	WMW+w	MT20	2.0	4.0		
V	WMWWW-t	MT20	5.0	8.0		
W	WMW+w	MT20	2.0	4.0		
X	WMW+w	MT20	2.0	4.0	2.00	0.50
Y	WMW+w	MT20	2.0	6.0		
Z	WMW+w	MT20	2.0	6.0	2.00	1.25
AA	WMW+w	MT20	2.0	6.0		
AB	WMWW-t	MT20	4.0	4.0		
AC	WMWW-t	MT20	4.0	4.0		
AD	WMWW-t	MT20	5.0	6.0	2.50	2.75
AE	WMWW-t	MT20	5.0	6.0	2.50	2.75

BRACING

MAX. UNBRACED TOP CHORD LENGTH = 5.95 FT.
MAX. UNBRACED BOTTOM CHORD LENGTH = 6.25 FT OR RIGID CEILING DIRECTLY APPLIED.

MAX. UNBRACED INTERIOR CHORD LENGTH = 5.27 FT

ALL PITCH BREAKS AND PERIMETER CORNER JOINTS MUST BE LATERALLY RESTRAINED.

1 LATERAL BRACE(S) AT 1/ 2 LENGTH OF A-T, C-I, C-I, C-I, C-I, C-I, C-I, C-I, B-S.

END VERTICAL(S) MUST BE SHEATHED OR HAVE BRACES AS INDICATED IN THE MAX. UNBRACED LENGTH COLUMN OF THE TABLE BELOW

1 - 2X4 LATERAL BRACE REQUIRED AT JOINTS AD TO PREVENT ROTATION.

LOADING

TOTAL LOAD CASES: (18)

CHORDS

MEMB. FR-TO	MAX. FORCE (LBS)	FACTORED VERT. LOAD (PLF) FROM	TO	LC1	MAX CSI (LC)	MAX. UNBRAC LENGTH
A- B	-4529 / 0	-418.6	-418.6	0.28 (3)	6.25	
B- C	-2732 / 0	-418.6	-418.6	0.31 (3)	6.25	
C- D	0 / 1531	-418.6	-418.6	0.33 (3)	10.00	
D- E	-695 / 161	-418.6	-418.6	0.10 (3)	6.25	
E- F	-3076 / 0	-418.6	-418.6	0.10 (3)	6.25	
F- G	-3076 / 0	-418.6	-418.6	0.06 (2)	6.25	
G- H	-4011 / 0	-418.6	-418.6	0.07 (3)	6.25	
H- I	-3191 / 0	-418.6	-418.6	0.05 (3)	6.25	
I- J	-6541 / 0	-418.6	-418.6	0.11 (3)	6.25	
J- K	-8232 / 0	-418.6	-418.6	0.46 (3)	5.95	
K- L	-6962 / 0	-418.6	-418.6	0.46 (3)	6.25	
L- M	-8594 / 0	-418.6	-418.6	0.16 (3)	6.25	
M- N	0 / 294	-418.6	-418.6	0.11 (3)	10.00	
T- A	-14676 / 0	0.0	0.0	0.46 (3)	4.84	
O- M	-9575 / 0	0.0	0.0	0.19 (3)	5.83	
T- S	-85 / 149	-327.5	-327.5	0.94 (3)	6.25	
S- R	0 / 4541	-327.5	-327.5	0.99 (3)	10.00	
R- Q	0 / 7073	-327.5	-327.5	0.57 (3)	10.00	
Q- P	0 / 7073	-327.5	-327.5	0.57 (3)	10.00	
P- O	-4 / 8	-327.5	-327.5	0.04 (3)	10.00	

WEBS

MEMB. FR-TO	MAX. FORCE (LBS)	MAX CSI (LC)
R- X	0 / 1736	0.37 (3)
X- K	0 / 1092	0.35 (3)
P- L	0 / 866	0.03 (3)
R- L	-3654 / 0	0.22 (3)
P- M	0 / 7648	0.22 (3)
U- D	-901 / 0	0.01 (3)
V- F	-647 / 0	0.01 (2)
C- U	-5100 / 0	0.27 (3)
U-AA	-5261 / 0	0.45 (3)
AA-AB	-7474 / 0	0.73 (3)
AB- V	-4155 / 0	0.23 (3)
V-AC	-791 / 0	0.02 (2)
AC- Y	-1902 / 0	0.06 (3)
Y- W	-2328 / 0	0.10 (3)
W- I	-2408 / 0	0.10 (3)
W- H	-4 / 518	0.01 (3)
S- Z	-1837 / 0	0.30 (3)
Z- B	-459 / 102	0.29 (3)
A- S	0 / 13019	0.38 (3)
Y-AE	-56 / 693	0.03 (3)
AE-AD	0 / 4133	0.14 (3)
AD- X	0 / 1202	0.06 (3)
Z-AA	-2766 / 0	0.08 (3)
AB- E	-2249 / 0	0.04 (3)
AC- G	-514 / 0	0.01 (2)
D-AB	0 / 3612	0.10 (3)
E- V	0 / 2833	0.08 (3)
AC- H	0 / 1363	0.04 (2)
V- G	-1061 / 0	0.02 (3)
AD- J	-1619 / 0	0.03 (3)
AD- K	0 / 2324	0.07 (3)
AE- I	0 / 2608	0.08 (3)
AE- J	-3177 / 0	0.05 (3)

TRUSS HAS BEEN CHECKED FOR UNBALANCED LOADING AS PER NBCC 4.1.6.2.(8)

WIND LOAD APPLIED IS DERIVED FROM REFERENCE VELOCITY PRESSURE OF { 7.5} PSF AT {40-0-0} FT-IN-SX REFERENCE HEIGHT ABOVE GRADE AND USING EXTERNAL PEAK COEFFICIENTS, CpCg, BASED ON THE {MAIN WIND FORCE RESISTING SYSTEM}.INTERNAL WIND PRESSURE IS BASED ON DESIGN {CATEGORY 2}. BUILDING MAY BE LOCATED ON {OPEN TERRAIN}, AND TRUSS IS DESIGNED TO BE LOCATED AT LEAST {0-0} FT-IN-SX AWAY FROM EAVE.TRUSS UPLIFT IS BASED ON TOP AND BOTTOM CHORD DEAD LOADS OF 5.0 PSF AND 5.0 PSF RESPECTIVELY.

DESIGN ASSUMPTIONS
- SLOPE REDUCTION FACTOR USED

(66 % OF 83.6 P.S.F. G.S.L. PLUS 2.1 P.S.F. RAIN LOAD) TIMES IMPORTANCE FACTOR EQUALS 57.5 P.S.F. SPECIFIED ROOF LIVE LOAD

ALLOWABLE DEFL.(LL)= L/240 (1.19")
CALCULATED VERT. DEFL.(LL) = L/ 941 (0.30")
ALLOWABLE DEFL.(TL)= L/180 (1.59")
CALCULATED VERT. DEFL.(TL) = L/ 687 (0.42")

CSI: TC=0.46/1.00 (K-L:3) , BC=0.99/1.00 (R-S:3) , WB=0.73/1.00 (AA-AB:3) , SSI=0.64/1.00 (S-T:3)

DOL LUMBER=1.00 NAIL=1.00 LS BEND=1.10 COMP=1.10 SHEAR=1.10 TENS= 1.10

SNOW LOAD IMPORTANCE FACTOR = 1.00
WIND LOAD IMPORTANCE FACTOR = 1.00
LIVE LOAD IMPORTANCE FACTOR = 1.00
COMPANION LIVE LOAD FACTOR = 1.00

AUTOSOLVE HEELS OFF

TRUSS PLATE MANUFACTURER IS NOT RESPONSIBLE FOR QUALITY CONTROL IN THE TRUSS MANUFACTURING PLANT .

NAIL VALUES

PLATE	GRIP(DRY) (PSI) MAX	MIN	SHEAR (PLI) MAX	MIN	SECTION (PLI) MAX	MIN
MT20	650	371	1747	788	1987	1873

PLATE PLACEMENT TOL. = 0.250 inches

PLATE ROTATION TOL. = 5.0 Deg.

JSI GRIP= 0.90 (P) (INPUT = 0.90)
JSI METAL= 0.66 (Q) (INPUT = 1.00)

JOB NAME	TRUSS NAME	QUANTITY	PLY	JOB DESC. Woodcreek / Adkins	DRWG NO.
211770	G5	1	4	TRUSS DESC.	

KAMLOOPS TRUSS LTD., Kamloops, BC V2H 1G3

Version 8.420 S Mar 22 2021 MiTek Industries, Inc. Thu May 27 07:06:35 2021 Page 1

ID:X2qvwXGfFYBXzZFI6ldjmRzCaiR-LajVvhCB2jtfi_6MMxLqulZVrCAJZ9FoQcis4XzCLWI

Scale: 3/16"=1'

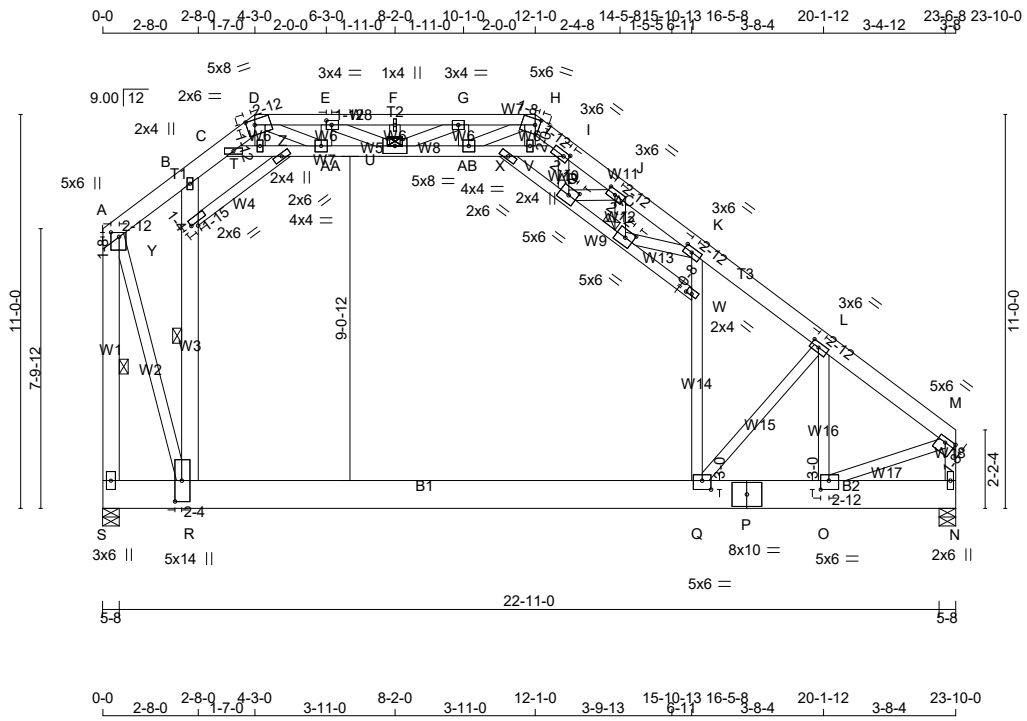

TOTAL WEIGHT = 4 X 235 = 942 lb

[M]

LUMBER

N. L. G. A. RULES

CHORDS	SIZE		LUMBER	DESCR.
A - D	2x6	DRY	2400F 2.0E	DF
D - H	2x4	DRY	1650F 1.5E	SPF
H - M	2x6	DRY	2400F 2.0E	DF
S - A	2x6	DRY	1650F 1.5E	SPF
N - M	2x4	DRY	1650F 1.5E	SPF
S - P	2x10	DRY	SS	DF

DIMENSIONS, SUPPORTS AND LOADINGS SPECIFIED BY FABRICATOR TO BE VERIFIED BY BUILDING DESIGNER

BEARINGS

	FACTORED GROSS REACTION		MAXIMUM FACTORED GROSS REACTION			INPUT BRG	REQRD BRG
JT	VERT	HORZ	DOWN	HORZ	UPLIFT	IN-SX	IN-SX
S	8748	0	8748	-154	0	5-8	2-6
N	8748	0	8886	0	0	5-8	2-11

PROVIDE FOR 154 LBS FACTORED HORIZONTAL REACTION AT JOINT S

UNFACTORED REACTIONS

	1ST LCASE	MAX./MIN. COMPONENT REACTIONS					
JT	COMBINED	SNOW	LIVE	PERM.LIVE	WIND	DEAD	SOIL
S	6113	4508 / 0	79 / 0	0 / 0	42 / -154	1525 / 0	0 / 0
N	6113	4600 / 0	79 / 0	0 / 0	46 / -148	1525 / 0	0 / 0

HORIZONTAL REACTIONS

S	---	0 / 0	0 / 0	0 / 0	84 / -110	0 / 0	0 /0

BEARING MATERIAL TO BE SPF NO.2 OR BETTER AT JOINT(S) S, N

DESIGN CRITERIA

*** SPECIAL LOADS ANALYSIS ***
GEOMETRY AND/OR BASIC LOADS CHANGED BY USER.
LOADS WERE DERIVED FROM USER INPUT
NO FURTHER MODIFICATIONS WERE MADE

SPECIFIED LOADS:

TOP CH.	LL	=	57.5	PSF
	DL	=	5.0	PSF
BOT CH.	LL	=	10.0	PSF
	DL	=	7.0	PSF
TOTAL LOAD		=	79.5	PSF

SPACING = 8.0 IN. C/C

LOADING IN FLAT SECTION BASED ON A SLOPE OF 9.00/12

*** NON STANDARD GIRDER ***
ADDT'L USER-DEFINED LOADS APPLIED TO ALL LOAD CASES.

THIS TRUSS IS DESIGNED FOR COMMERCIAL OR INDUSTRIAL BUILDING REQUIREMENTS OF PART 4, NBCC 2015

THIS DESIGN COMPLIES WITH:
- PART 4 OF BCBC 2018 , ABC 2019
- PART 4 OF OBC 2012 (2019 AMENDMENT)
- CSA 086-14
- TPIC 2014

CONTINUED ON PAGE 2

DRY: SEASONED LUMBER.

DESIGN CONSISTS OF 4 TRUSSES BUILT SEPARATELY THEN FASTENED TOGETHER AS FOLLOWS:

CHORDS	#ROWS	SURFACE SPACING (IN)	LOAD(PLF)
TOP CHORDS : (0.122"X3") SPIRAL NAILS			
A- D	2	12	SIDE(207.0)
H- M	2	12	SIDE(207.0)
S- A	2	12	TOP
D- H	1	4	SIDE(258.8)
N- M	1	12	TOP
BOTTOM CHORDS : (0.122"X3") SPIRAL NAILS			
S- P	3	12	SIDE(236.3)
P- N	3	12	SIDE(236.3)
WEBS : (0.122"X3") SPIRAL NAILS			
2x4	1	6	
2x6	2	6	

STAGGER NAILS BY HALF THE SURFACE SPACING IN ADJACENT PLIES.

IN ADDITION, PRE-DRILL ONE 0.56" DIAM. HOLE IN EACH CHORD PANEL AND INSTALL 0.50" DIAM. ASTM A307 BOLTS WITH WASHERS, BOTH SIDES. FOR OTHER BOLT TYPES SEE CSAO86 3.3.2.

TOP - COMPONENTS ARE LOADED FROM THE TOP AND MUST BE PLACED ON TOP EDGE OF ALL PLIES FOR THE LOAD TO BE TRANSFERRED TO EACH PLY.

SIDE - PLF SHOWN IS THE EQUIVALENT UDL APPLIED TO ONE SIDE THAT THE CORRESPONDING NAILING PATTERN SHALL BE CAPABLE OF TRANSFERING. REMAINING PLF MUST BE APPLIED ON THE OPPOSITE SIDE OR ON THE TOP.

PLATES (table is in inches)

JT	TYPE	PLATES	W	LEN	Y	X
A	TMVW+p	MT20	5.0	6.0	1.50	2.75
B	TMW+w	MT20	2.0	4.0		
C	TMW+w	MT20	2.0	6.0		
D	TTWW-m	MT20	5.0	8.0	1.75	2.75
E	TMWW-t	MT20	3.0	4.0	1.50	1.75
F	TMW+w	MT20	1.0	4.0		
G	TMWW-t	MT20	3.0	4.0		
H	TTWW-m	MT20	5.0	6.0	2.00	1.50
I	TMWW-t	MT20	3.0	6.0	1.50	1.75
J, K, L						
J	TMWW-t	MT20	3.0	6.0	1.50	2.75
M	TMVW-t	MT20	5.0	6.0	1.50	Edge
N	BMV1+p	MT20	2.0	6.0		
O	BMWW-t	MT20	5.0	6.0	3.00	2.75
P	BS-t	MT20	8.0	10.0		
Q	BMWW-t	MT20	5.0	6.0	3.00	3.00
R	BMWW+t	MT20	5.0	14.0	7.00	2.25
S	BMV1+p	MT20	3.0	6.0		
T	WMW+w	MT20	2.0	4.0		
U	WMWWW-t	MT20	5.0	8.0		
V	WMW+w	MT20	2.0	4.0		
W	WMW+w	MT20	2.0	4.0	2.00	0.50
X	WMW+w	MT20	2.0	6.0		
Y	WMW+w	MT20	2.0	6.0	2.00	1.25
Z	WMW+w	MT20	2.0	6.0		
AA	WMWW-t	MT20	4.0	4.0		
AB	WMWW-t	MT20	4.0	4.0		
AC	WMWW-t	MT20	5.0	6.0	2.50	2.75
AD	WMWW-t	MT20	5.0	6.0	2.50	2.75

Edge - INDICATES REFERENCE CORNER OF PLATE TOUCHES EDGE OF CHORD.

BRACING

MAX. UNBRACED TOP CHORD LENGTH = 6.01 FT.
MAX. UNBRACED BOTTOM CHORD LENGTH = 6.25 FT OR RIGID CEILING DIRECTLY APPLIED.

MAX. UNBRACED INTERIOR CHORD LENGTH = 5.30 FT

ALL PITCH BREAKS AND PERIMETER CORNER JOINTS MUST BE LATERALLY RESTRAINED.

1 LATERAL BRACE(S) AT 1/ 2 LENGTH OF A-S, C-I, C-I, C-I, C-I, C-I, C-I, C-I, B-R.

END VERTICAL(S) MUST BE SHEATHED OR HAVE BRACES AS INDICATED IN THE MAX. UNBRACED LENGTH COLUMN OF THE TABLE BELOW

1 - 2X4 LATERAL BRACE REQUIRED AT JOINTS AC TO PREVENT ROTATION.

LOADING

TOTAL LOAD CASES: (18)

CHORDS

MEMB. FR-TO	MAX. FORCE (LBS)	FACTORED VERT. LOAD (PLF) FROM	TO	LC1	MAX CSI (LC)	MAX. UNBRAC LENGTH
A- B	-4471 / 0	-406.6	-406.6	0.27 (3)	6.25	
B- C	-2687 / 0	-406.6	-406.6	0.31 (3)	6.25	
C- D	0 / 1543	-406.6	-406.6	0.33 (3)	10.00	
D- E	-619 / 161	-406.6	-406.6	0.09 (3)	6.25	
E- F	-2931 / 0	-406.6	-406.6	0.10 (3)	6.25	
F- G	-2931 / 0	-406.6	-406.6	0.06 (2)	6.25	
G- H	-3840 / 0	-406.6	-406.6	0.07 (3)	6.25	
H- I	-3055 / 0	-406.6	-406.6	0.05 (3)	6.25	
I- J	-6386 / 0	-406.6	-406.6	0.11 (3)	6.25	
J- K	-8072 / 0	-406.6	-406.6	0.46 (3)	6.01	
K- L	-6861 / 0	-406.6	-406.6	0.46 (3)	6.25	
L- M	-8463 / 0	-406.6	-406.6	0.16 (3)	6.25	
S- A	-14467 / 0	0.0	0.0	0.45 (3)	4.87	
N- M	-8456 / 0	0.0	0.0	0.17 (3)	6.13	
S- R	-78 / 136	-327.5	-327.5	0.93 (3)	6.25	
R- Q	0 / 4472	-327.5	-327.5	0.98 (3)	10.00	
Q- P	0 / 6965	-327.5	-327.5	0.55 (3)	10.00	
P- O	0 / 6965	-327.5	-327.5	0.55 (3)	10.00	
O- N	-4 / 8	-327.5	-327.5	0.04 (3)	10.00	

WEBS

MEMB. FR-TO	MAX. FORCE (LBS)	MAX CSI (LC)
Q- W	0 / 1765	0.37 (3)
W- K	0 / 1128	0.35 (3)
O- L	0 / 864	0.03 (3)
Q- L	-3595 / 0	0.21 (3)
O- M	0 / 7530	0.22 (3)
T- D	-879 / 0	0.01 (3)
U- F	-628 / 0	0.01 (2)
C- T	-5069 / 0	0.26 (3)
T- Z	-5226 / 0	0.45 (3)
Z-AA	-7389 / 0	0.72 (3)
AA- U	-4163 / 0	0.23 (3)
U-AB	-892 / 0	0.02 (2)
AB- X	-1952 / 0	0.06 (3)
X- V	-2329 / 0	0.10 (3)
V- I	-2402 / 0	0.10 (3)
V- H	-5 / 485	0.01 (3)
R- Y	-1745 / 0	0.29 (3)
Y- B	-400 / 102	0.29 (3)
A- R	0 / 12827	0.37 (3)
X-AD	-56 / 631	0.03 (3)
AD-AC	0 / 4044	0.14 (3)
AC- W	0 / 1189	0.06 (3)
Y- Z	-2704 / 0	0.08 (3)
AA- E	-2192 / 0	0.03 (3)
AB- G	-507 / 0	0.01 (2)
D-AA	0 / 3512	0.10 (3)
E- U	0 / 2757	0.08 (3)
AB- H	0 / 1307	0.04 (2)
U- G	-1033 / 0	0.02 (3)
AC- J	-1577 / 0	0.03 (3)
AC- K	0 / 2263	0.07 (3)
AD- I	0 / 2588	0.08 (3)
AD- J	-3152 / 0	0.05 (3)

TRUSS HAS BEEN CHECKED FOR UNBALANCED LOADING AS PER NBCC 4.1.6.2.(8)

WIND LOAD APPLIED IS DERIVED FROM REFERENCE VELOCITY PRESSURE OF { 7.5} PSF AT {40-0-0} FT-IN-SX REFERENCE HEIGHT ABOVE GRADE AND USING EXTERNAL PEAK COEFFICIENTS, CpCg, BASED ON THE {MAIN WIND FORCE RESISTING SYSTEM}.INTERNAL WIND PRESSURE IS BASED ON DESIGN {CATEGORY 2}. BUILDING MAY BE LOCATED ON {OPEN TERRAIN}, AND TRUSS IS DESIGNED TO BE LOCATED AT LEAST {0-0} FT-IN-SX AWAY FROM EAVE.TRUSS UPLIFT IS BASED ON TOP AND BOTTOM CHORD DEAD LOADS OF 5.0 PSF AND 5.0 PSF RESPECTIVELY.

DESIGN ASSUMPTIONS
- SLOPE REDUCTION FACTOR USED

(66 % OF 83.6 P.S.F. G.S.L. PLUS 2.1 P.S.F. RAIN LOAD) TIMES IMPORTANCE FACTOR EQUALS 57.5 P.S.F. SPECIFIED ROOF LIVE LOAD

ALLOWABLE DEFL.(LL)= L/240 (1.19")
CALCULATED VERT. DEFL.(LL) = L/ 957 (0.30")
ALLOWABLE DEFL.(TL)= L/180 (1.59")
CALCULATED VERT. DEFL.(TL) = L/ 695 (0.41")

CSI: TC=0.46/1.00 (K-L:3) , BC=0.98/1.00 (Q-R:3) , WB=0.72/1.00 (Z-AA:3) , SSI=0.64/1.00 (R-S:3)

DOL LUMBER=1.00 NAIL=1.00 LS BEND=1.10 COMP=1.10 SHEAR=1.10 TENS= 1.10

SNOW LOAD IMPORTANCE FACTOR = 1.00
WIND LOAD IMPORTANCE FACTOR = 1.00
LIVE LOAD IMPORTANCE FACTOR = 1.00
COMPANION LIVE LOAD FACTOR = 1.00

AUTOSOLVE HEELS OFF

TRUSS PLATE MANUFACTURER IS NOT RESPONSIBLE FOR QUALITY CONTROL IN THE TRUSS MANUFACTURING PLANT .

NAIL VALUES

PLATE	GRIP(DRY) (PSI) MAX	MIN	SHEAR (PLI) MAX	MIN	SECTION (PLI) MAX	MIN
MT20	650	371	1747	788	1987	1873

PLATE PLACEMENT TOL. = 0.250 inches

PLATE ROTATION TOL. = 5.0 Deg.

JSI GRIP= 0.89 (O) (INPUT = 0.90)
JSI METAL= 0.65 (P) (INPUT = 1.00)

JOB NAME	TRUSS NAME	QUANTITY	PLY	JOB DESC.	DRWG NO.
211770	G6	1	1	Woodcreek / Adkins TRUSS DESC.	

KAMLOOPS TRUSS LTD., Kamloops, BC V2H 1G3

Version 8.420 S Mar 22 2021 MiTek Industries, Inc. Thu May 27 07:06:37 2021 Page 1

ID:X2qvwXGfFYBXzZFl6ldjmRzCaiR-HzrFKNERaK7NyIFkUMNIzAetF0yw1795twBy9PzCLWG

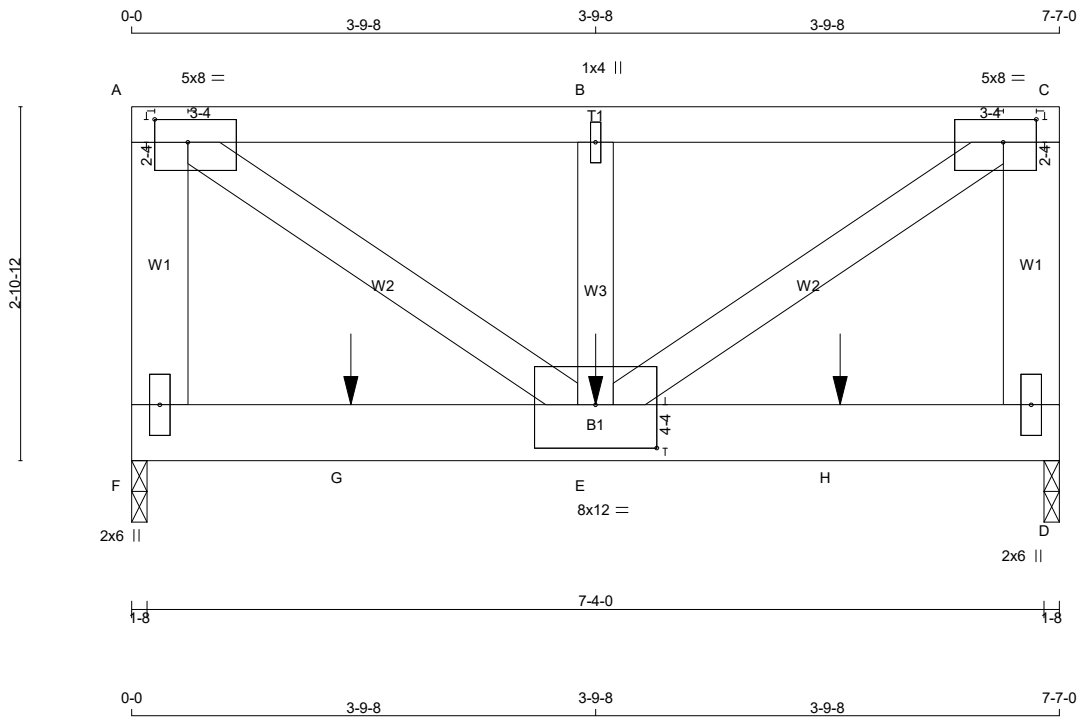

TOTAL WEIGHT = 41 lb

[M]

LUMBER

N. L. G. A. RULES

CHORDS	SIZE		LUMBER	DESCR.
F - A	2x6	DRY	1650F 1.5E	SPF
A - C	2x4	DRY	1650F 1.5E	SPF
D - C	2x6	DRY	1650F 1.5E	SPF
F - D	2x6	DRY	1650F 1.5E	SPF
ALL WEBS	2x4	DRY	1650F 1.5E	SPF

DIMENSIONS, SUPPORTS AND LOADINGS SPECIFIED BY FABRICATOR TO BE VERIFIED BY BUILDING DESIGNER

BEARINGS

	FACTORED GROSS REACTION		MAXIMUM FACTORED GROSS REACTION			INPUT BRG	REQRD BRG
JT	VERT	HORZ	DOWN	HORZ	UPLIFT	IN-SX	IN-SX
F	3056	0	3056	0	0	1-8	4-7
D	3056	0	3056	0	0	1-8	4-7

UNFACTORED REACTIONS

	1ST LCASE	MAX./MIN. COMPONENT REACTIONS					
JT	COMBINED	SNOW	LIVE	PERM.LIVE	WIND	DEAD	SOIL
F	2104	1701 / 0	0 / 0	0 / 0	0 / 0	404 / 0	0 / 0
D	2105	1701 / 0	0 / 0	0 / 0	0 / 0	404 / 0	0 / 0

BRACING

TOP CHORD TO BE SHEATHED OR MAX. PURLIN SPACING = 4.06 FT.
MAX. UNBRACED BOTTOM CHORD LENGTH = 10.00 FT OR RIGID CEILING DIRECTLY APPLIED.

ALL PITCH BREAKS AND PERIMETER CORNER JOINTS MUST BE LATERALLY RESTRAINED.

LOADING

TOTAL LOAD CASES: (4)

CHORDS

MEMB. FR-TO	MAX. FACTORED FORCE (LBS)	FACTORED VERT. LOAD (PLF) FROM	TO	LC1	MAX CSI (LC)	MAX. UNBRAC LENGTH
F- A	-2399 / 0	0.0	0.0	0.15 (1)	7.39	
A- B	-3243 / 0	-156.6	-156.6	0.34 (1)	4.06	
B- C	-3243 / 0	-156.6	-156.6	0.34 (1)	4.06	

WEBS

MEMB. FR-TO	MAX. FACTORED FORCE (LBS)	MAX CSI (LC)
A- E	0 / 3894	0.50 (1)
E- B	-702 / 0	0.06 (1)
E- C	0 / 3894	0.50 (1)

DESIGN CRITERIA

SPECIFIED LOADS:

TOP CH.	LL	=	48.1	PSF
	DL	=	5.0	PSF
BOT CH.	LL	=	0.0	PSF
	DL	=	7.0	PSF
TOTAL LOAD		=	60.0	PSF

SPACING = 24.0 IN. C/C

LOADING IN FLAT SECTION BASED ON A SLOPE OF 6.00/12

THIS TRUSS IS DESIGNED FOR RESIDENTIAL OR SMALL BUILDING REQUIREMENTS OF PART 9, NBCC 2015

THIS DESIGN COMPLIES WITH:
- PART 9 OF BCBC 2018 , ABC 2019
- PART 9 OF OBC 2012 (2019 AMENDMENT)
- CSA 086-14
- TPIC 2014

(55 % OF 83.6 P.S.F. G.S.L. PLUS 2.1 P.S.F. RAIN LOAD) EQUALS 48.1 P.S.F. SPECIFIED ROOF LIVE LOAD

ALLOWABLE DEFL.(LL)= L/180 (0.51")
CALCULATED VERT. DEFL.(LL) = L/ 999 (0.06")
ALLOWABLE DEFL.(TL)= L/180 (0.51")
CALCULATED VERT. DEFL.(TL) = L/ 997 (0.09")

CONTINUED ON PAGE 2

JOB NAME	TRUSS NAME	QUANTITY	PLY	JOB DESC. Woodcreek / Adkins	DRWG NO.
211770	G6	1	1	TRUSS DESC.	

KAMLOOPS TRUSS LTD., Kamloops, BC V2H 1G3

ID:X2qvwXGfFYBXzZFI6ldjmRzCaiR-HzrFKNERaK7NyIFkUMNIzAetF0yw1795twBy9PzCLWG

DRY: SEASONED LUMBER.

PLATES (table is in inches)

JT	TYPE	PLATES	W	LEN	Y	X
A	TMVW-t	MT20	5.0	8.0	2.25	3.25
B	TMW+w	MT20	1.0	4.0		
C	TMVW-t	MT20	5.0	8.0	2.25	3.25
D	BMV1+p	MT20	2.0	6.0		
E	BMWWW-t	MT20	8.0	12.0	4.25	6.00
F	BMV1+p	MT20	2.0	6.0		

LOADING

TOTAL LOAD CASES: (4)

CHORDS MEMB. FR-TO	MAX. FACTORED FORCE (LBS)	FACTORED VERT. LOAD (PLF) FROM	TO	LC1 CSI (LC)	MAX	WEBS MEMB. FR-TO	MAX. FACTORED FORCE (LBS)	MAX CSI (LC)
D- C	-2399 / 0	0.0	0.0	0.15 (1)	7.39			
F- G	0 / 0	-17.5	-17.5	0.58 (1)	10.00			
G- E	0 / 0	-17.5	-17.5	0.58 (1)	10.00			
E- H	0 / 0	-17.5	-17.5	0.58 (1)	10.00			
H- D	0 / 0	-17.5	-17.5	0.58 (1)	10.00			

UNBRAC LENGTH

FACTORED CONCENTRATED LOADS (LBS)

JT	LOC.	LC1	MAX-	MAX+	FACE	DIR.	TYPE	HEEL	CONN.
E	3-9-8	-1597	-1597	---	BACK	VERT	TOTAL	---	C1
G	1-9-8	-1597	-1597	---	BACK	VERT	TOTAL	---	C1
H	5-9-8	-1597	-1597	---	BACK	VERT	TOTAL	---	C1

CONNECTION REQUIREMENTS

1) **C1:** A SUITABLE HANGER/MECHANICAL CONNECTION IS REQUIRED.

CSI: TC=0.34/1.00 (A-B:1) , BC=0.58/1.00 (D-E:1) , WB=0.50/1.00 (A-E:1) , SSI=0.67/1.00 (E-F:1)

DOL LUMBER=1.00 NAIL=1.00 LS BEND=1.00 COMP=1.00 SHEAR=1.00 TENS= 1.00

COMPANION LIVE LOAD FACTOR = 1.00

TRUSS PLATE MANUFACTURER IS NOT RESPONSIBLE FOR QUALITY CONTROL IN THE TRUSS MANUFACTURING PLANT .

NAIL VALUES

PLATE	GRIP(DRY) (PSI) MAX	MIN	SHEAR (PLI) MAX	MIN	SECTION (PLI) MAX	MIN
MT20	650	371	1747	788	1987	1873

PLATE PLACEMENT TOL. = 0.250 inches

PLATE ROTATION TOL. = 5.0 Deg.

JSI GRIP= 0.87 (C) (INPUT = 0.90)
JSI METAL= 0.58 (C) (INPUT = 1.00)

JOB NAME	TRUSS NAME	QUANTITY	PLY	JOB DESC.	DRWG NO.
211770	G7	1	1	Woodcreek / Adkins TRUSS DESC.	

KAMLOOPS TRUSS LTD., Kamloops, BC V2H 1G3

Version 8.420 S Mar 22 2021 MiTek Industries, Inc. Thu May 27 07:06:39 2021 Page 1

ID:X2qvwXGfFYBXzZFl6ldjmRzCaiR-DLz0l3Fi6yN5BbP7bnPm2bjCnpkoV55NKEg3DIzCLWE

Scale = 1:23.4

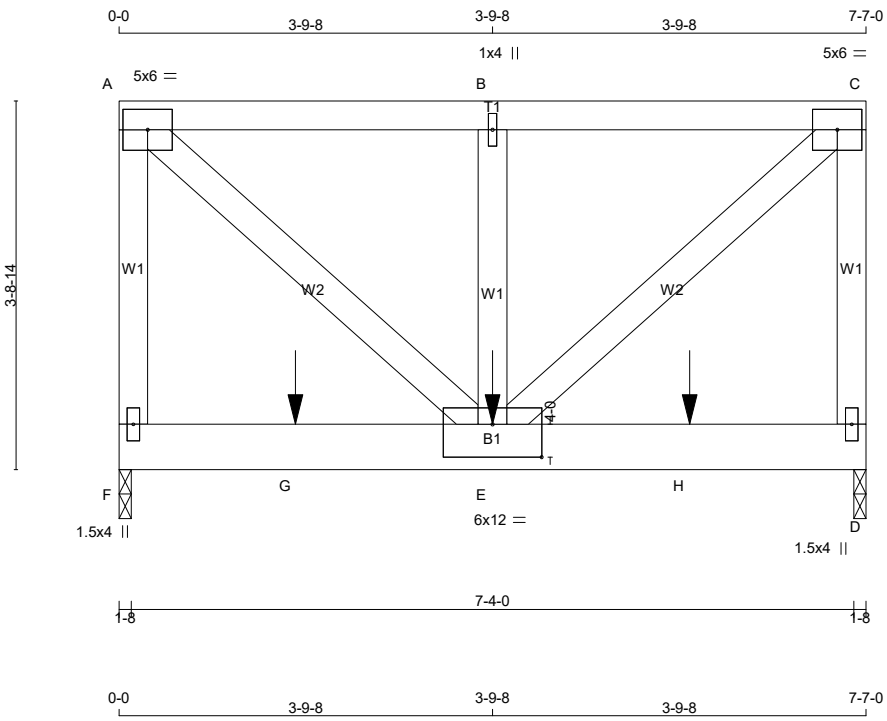

TOTAL WEIGHT = 43 lb

[M]

LUMBER

N. L. G. A. RULES

CHORDS	SIZE		LUMBER	DESCR.
F - A	2x4	DRY	1650F 1.5E	SPF
A - C	2x4	DRY	1650F 1.5E	SPF
D - C	2x4	DRY	1650F 1.5E	SPF
F - D	2x6	DRY	1650F 1.5E	SPF
ALL WEBS	2x4	DRY	1650F 1.5E	SPF

DIMENSIONS, SUPPORTS AND LOADINGS SPECIFIED BY FABRICATOR TO BE VERIFIED BY BUILDING DESIGNER

BEARINGS

JT	FACTORED GROSS REACTION VERT	HORZ	MAXIMUM FACTORED GROSS REACTION DOWN	HORZ	UPLIFT	INPUT BRG IN-SX	REQRD BRG IN-SX
F	1612	0	1612	0	0	1-8	1-12
D	1612	0	1612	0	0	1-8	1-12

UNFACTORED REACTIONS

JT	1ST LCASE COMBINED	MAX./MIN. COMPONENT REACTIONS SNOW	LIVE	PERM.LIVE	WIND	DEAD	SOIL
F	1109	903 / 0	0 / 0	0 / 0	0 / 0	206 / 0	0 / 0
D	1109	903 / 0	0 / 0	0 / 0	0 / 0	206 / 0	0 / 0

BRACING

TOP CHORD TO BE SHEATHED OR MAX. PURLIN SPACING = 5.90 FT.
MAX. UNBRACED BOTTOM CHORD LENGTH = 10.00 FT OR RIGID CEILING DIRECTLY APPLIED.

ALL PITCH BREAKS AND PERIMETER CORNER JOINTS MUST BE LATERALLY RESTRAINED.

LOADING

TOTAL LOAD CASES: (4)

CHORDS

MEMB. FR-TO	MAX. FACTORED FORCE (LBS)	FACTORED VERT. LOAD (PLF) FROM	TO	LC1	MAX CSI (LC)
F- A	-1335 / 0	0.0	0.0	0.19 (1)	
A- B	-1244 / 0	-156.6	-156.6	0.33 (1)	
B- C	-1244 / 0	-156.6	-156.6	0.33 (1)	

WEBS

MEMB. FR-TO	MAX. UNBRAC LENGTH	MEMB. FR-TO	MAX. FACTORED FORCE (LBS)	MAX CSI (LC)
	7.77	A- E	0 / 1664	0.21 (1)
	5.90	E- B	-726 / 0	0.08 (1)
	5.90	E- C	0 / 1664	0.21 (1)

DESIGN CRITERIA

SPECIFIED LOADS:

TOP CH.	LL	=	48.1	PSF
	DL	=	5.0	PSF
BOT CH.	LL	=	0.0	PSF
	DL	=	7.0	PSF
TOTAL LOAD		=	60.0	PSF

SPACING = 24.0 IN. C/C

LOADING IN FLAT SECTION BASED ON A SLOPE OF 6.00/12

THIS TRUSS IS DESIGNED FOR RESIDENTIAL OR SMALL BUILDING REQUIREMENTS OF PART 9, NBCC 2015

THIS DESIGN COMPLIES WITH:
- PART 9 OF BCBC 2018 , ABC 2019
- PART 9 OF OBC 2012 (2019 AMENDMENT)
- CSA 086-14
- TPIC 2014

(55 % OF 83.6 P.S.F. G.S.L. PLUS 2.1 P.S.F. RAIN LOAD) EQUALS 48.1 P.S.F. SPECIFIED ROOF LIVE LOAD

ALLOWABLE DEFL.(LL)= L/180 (0.51")
CALCULATED VERT. DEFL.(LL) = L/ 999 (0.02")
ALLOWABLE DEFL.(TL)= L/180 (0.51")
CALCULATED VERT. DEFL.(TL) = L/ 999 (0.04")

CONTINUED ON PAGE 2

JOB NAME	TRUSS NAME	QUANTITY	PLY	JOB DESC. Woodcreek / Adkins	DRWG NO.
211770	G7	1	1	TRUSS DESC.	

DRY: SEASONED LUMBER.

PLATES (table is in inches)

JT	TYPE	PLATES	W	LEN	Y	X
A	TMVW-t	MT20	5.0	6.0		
B	TMW+w	MT20	1.0	4.0		
C	TMVW-t	MT20	5.0	6.0		
D	BMV1+p	MT20	1.5	4.0		
E	BMWWW-t	MT20	6.0	12.0	4.00	6.00
F	BMV1+p	MT20	1.5	4.0		

LOADING

TOTAL LOAD CASES: (4)

CHORDS MEMB. FR-TO	MAX. FACTORED FORCE (LBS)	FACTORED VERT. LOAD (PLF) FROM	TO	LC1 MAX CSI (LC)	WEBS MAX. UNBRAC LENGTH	MEMB. FR-TO	MAX. FACTORED FORCE (LBS)	MAX CSI (LC)
D- C	-1335 / 0	0.0	0.0	0.19 (1)	7.77			
F- G	0 / 0	-17.5	-17.5	0.24 (1)	10.00			
G- E	0 / 0	-17.5	-17.5	0.24 (1)	10.00			
E- H	0 / 0	-17.5	-17.5	0.24 (1)	10.00			
H- D	0 / 0	-17.5	-17.5	0.24 (1)	10.00			

FACTORED CONCENTRATED LOADS (LBS)

JT	LOC.	LC1	MAX-	MAX+	FACE	DIR.	TYPE	HEEL	CONN.
E	3-9-8	-635	-635	---	BACK	VERT	TOTAL	---	C1
G	1-9-8	-635	-635	---	BACK	VERT	TOTAL	---	C1
H	5-9-8	-635	-635	---	BACK	VERT	TOTAL	---	C1

CONNECTION REQUIREMENTS

1) **C1:** A SUITABLE HANGER/MECHANICAL CONNECTION IS REQUIRED.

CSI: TC=0.33/1.00 (A-B:1) , BC=0.24/1.00 (D-E:1) , WB=0.21/1.00 (A-E:1) , SSI=0.31/1.00 (A-B:1)

DOL LUMBER=1.00 NAIL=1.00 LS BEND=1.00 COMP=1.00 SHEAR=1.00 TENS= 1.00

COMPANION LIVE LOAD FACTOR = 1.00

TRUSS PLATE MANUFACTURER IS NOT RESPONSIBLE FOR QUALITY CONTROL IN THE TRUSS MANUFACTURING PLANT .

NAIL VALUES

PLATE	GRIP(DRY) (PSI) MAX	MIN	SHEAR (PLI) MAX	MIN	SECTION (PLI) MAX	MIN
MT20	650	371	1747	788	1987	1873

PLATE PLACEMENT TOL. = 0.250 inches

PLATE ROTATION TOL. = 5.0 Deg.

JSI GRIP= 0.89 (D) (INPUT = 0.90)
JSI METAL= 0.37 (F) (INPUT = 1.00)

JOB NAME	TRUSS NAME	QUANTITY	PLY	JOB DESC. Woodcreek / Adkins	DRWG NO.
211770	G8	1	3	TRUSS DESC.	

KAMLOOPS TRUSS LTD., Kamloops, BC V2H 1G3

Version 8.420 S Mar 22 2021 MiTek Industries, Inc. Thu May 27 07:06:42 2021 Page 1

ID:X2qvwXGfFYBXzZFl6ldjmRzCaiR-ewe8N4IaPtlf238iGvzTgELo01nRiV_q1CujqdzCLWB

Scale = 1:56.3

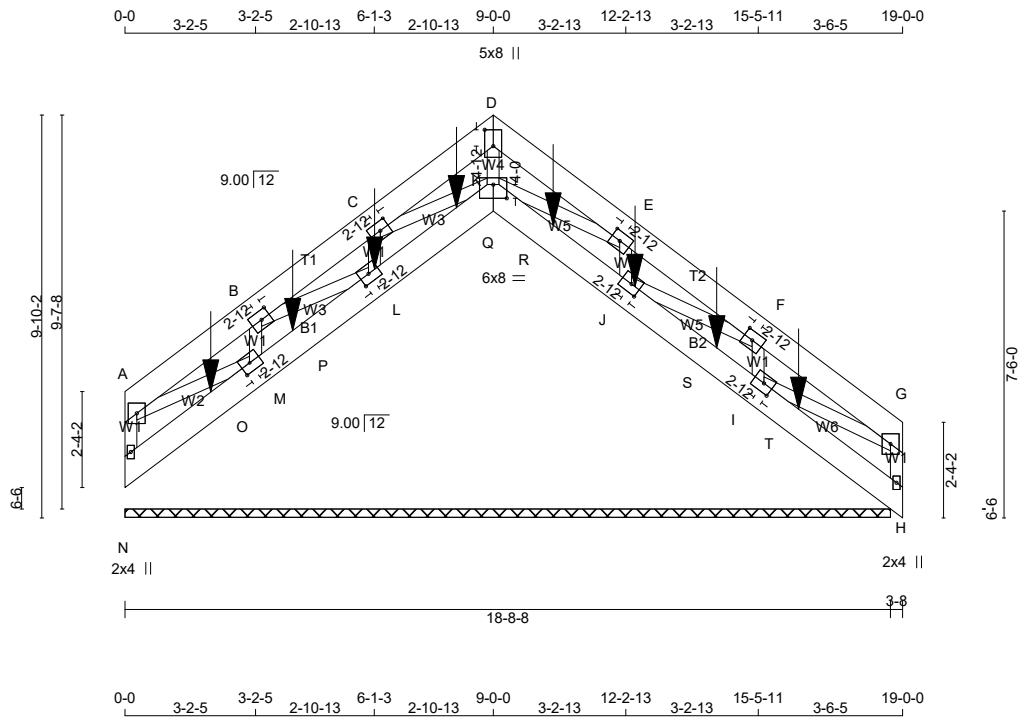

TOTAL WEIGHT = 3 X 168 = 505 lb

[M]

LUMBER

N. L. G. A. RULES

CHORDS	SIZE		LUMBER	DESCR.
N - A	2x4	DRY	1650F 1.5E	SPF
A - D	2x8	DRY	1950F 1.7E	DF
D - G	2x8	DRY	1950F 1.7E	DF
H - G	2x4	DRY	1650F 1.5E	SPF
N - K	2x8	DRY	1950F 1.7E	DF
K - H	2x8	DRY	1950F 1.7E	DF

ALL WEBS

DIMENSIONS, SUPPORTS AND LOADINGS SPECIFIED BY FABRICATOR TO BE VERIFIED BY BUILDING DESIGNER

BEARINGS

JT	FACTORED GROSS REACTION VERT	HORZ	MAXIMUM FACTORED GROSS REACTION DOWN	HORZ	UPLIFT	INPUT BRG IN-SX	REQRD BRG IN-SX
N	582	0	582	0	0	18-8-8 (9-8-8)	1-14
H	496	0	496	0	0	18-8-8 (9-8-8)	1-14
K	3248	0	3248	0	0	18-8-8 (9-8-8)	1-14
M	4397	0	4397	0	0	18-8-8 (9-8-8)	1-14
L	4587	0	4587	0	0	18-8-8 (9-8-8)	1-14
J	5178	0	5178	0	0	18-8-8 (9-8-8)	1-14
I	4477	0	4477	0	0	18-8-8 (9-8-8)	1-14

VALUE IN PARENTHESIS INDICATES EFFECTIVE BEARING LENGTH

BEVELED PLATE OR SHIM REQUIRED TO PROVIDE FULL BEARING SURFACE WITH TRUSS CHORD AT JT(S): N , H , K , M , L , J , I

UNFACTORED REACTIONS

JT	1ST LCASE COMBINED	MAX./MIN. COMPONENT REACTIONS SNOW	LIVE	PERM.LIVE	WIND	DEAD	SOIL
N	401	323 / 0	0 / 0	0 / 0	0 / 0	77 / 0	0 / 0
H	342	275 / 0	0 / 0	0 / 0	0 / 0	66 / 0	0 / 0
K	2238	1802 / 0	0 / 0	0 / 0	0 / 0	435 / 0	0 / 0
M	3030	2440 / 0	0 / 0	0 / 0	0 / 0	590 / 0	0 / 0
L	3160	2548 / 0	0 / 0	0 / 0	0 / 0	613 / 0	0 / 0
J	3567	2876 / 0	0 / 0	0 / 0	0 / 0	691 / 0	0 / 0
I	3085	2484 / 0	0 / 0	0 / 0	0 / 0	601 / 0	0 / 0

BEARING MATERIAL TO BE SPF NO.2 OR BETTER AT JOINT(S) N, H, K, M, L, J, I

DESIGN CRITERIA

SPECIFIED LOADS:

TOP CH.	LL =	48.1	PSF
	DL =	5.0	PSF
BOT CH.	LL =	0.0	PSF
	DL =	7.0	PSF
TOTAL LOAD	=	60.0	PSF

SPACING = 24.0 IN. C/C

THIS TRUSS IS DESIGNED FOR RESIDENTIAL OR SMALL BUILDING REQUIREMENTS OF PART 9, NBCC 2015

THIS DESIGN COMPLIES WITH:
- PART 9 OF BCBC 2018 , ABC 2019
- PART 9 OF OBC 2012 (2019 AMENDMENT)
- CSA 086-14
- TPIC 2014

(55 % OF 83.6 P.S.F. G.S.L. PLUS 2.1 P.S.F. RAIN LOAD) EQUALS 48.1 P.S.F. SPECIFIED ROOF LIVE LOAD

CSI: TC=0.01/1.00 (E-F:1) , BC=0.11/1.00 (J-K:1) , WB=0.01/1.00 (F-I:1) , SSI=0.25/1.00 (H-I:1)

DOL LUMBER=1.00 NAIL=1.00 LS BEND=1.10 COMP=1.10 SHEAR=1.10 TENS= 1.10

CONTINUED ON PAGE 2

JOB NAME	TRUSS NAME	QUANTITY	PLY	JOB DESC. Woodcreek / Adkins	DRWG NO.
211770	G8	1	3	TRUSS DESC.	

NOTES

DRY: SEASONED LUMBER.

DESIGN CONSISTS OF **3** TRUSSES BUILT SEPARATELY THEN FASTENED TOGETHER AS FOLLOWS:

CHORDS	#ROWS	SURFACE SPACING (IN)	LOAD(PLF)
TOP CHORDS : (0.122"X3") SPIRAL NAILS			
N- A	1	12	TOP
G- H	1	12	TOP
A- D	2	12	TOP
D- G	2	12	TOP
BOTTOM CHORDS : (0.122"X3") SPIRAL NAILS			
N- K	2	5	SIDE(641.5)
K- H	2	6	SIDE(640.9)
WEBS : (0.122"X3") SPIRAL NAILS			
2x4	1	6	

STAGGER NAILS BY HALF THE SURFACE SPACING IN ADJACENT PLIES.

GIRDER NAILING ASSUMES NAILED HANGERS ARE FASTENED WITH MIN. 3-0 INCH NAILS.

TOP - COMPONENTS ARE LOADED FROM THE TOP AND MUST BE PLACED ON TOP EDGE OF ALL PLIES FOR THE LOAD TO BE TRANSFERRED TO EACH PLY.

SIDE - PLF SHOWN IS THE EQUIVALENT UDL APPLIED TO ONE SIDE THAT THE CORRESPONDING NAILING PATTERN SHALL BE CAPABLE OF TRANSFERING. REMAINING PLF MUST BE APPLIED ON THE OPPOSITE SIDE OR ON THE TOP.

PLATES (table is in inches)

JT	TYPE	PLATES	W	LEN	Y	X
A	TMVW+p	MT20	5.0	6.0		
B, C, E, F						
B	TMWW-t	MT20	5.0	6.0	2.50	2.75
D	TTW+p	MT20	5.0	8.0	4.75	2.50
G	TMVW+p	MT20	5.0	6.0		
H	BMV1+p	MT20	2.0	4.0		
I, J, L, M						
I	BMWW1-t	MT20	5.0	6.0	2.50	2.75
K	BBWWW1-p	MT20	6.0	8.0	4.00	4.00
N	BMV1+p	MT20	2.0	4.0		

BRACING

TOP CHORD TO BE SHEATHED OR MAX. PURLIN SPACING = 6.25 FT.
MAX. UNBRACED BOTTOM CHORD LENGTH = 6.25 FT OR RIGID CEILING DIRECTLY APPLIED.

ALL PITCH BREAKS AND PERIMETER CORNER JOINTS MUST BE LATERALLY RESTRAINED.

LOADING

TOTAL LOAD CASES: (4)

CHORDS

MEMB. FR-TO	MAX. FACTORED FORCE (LBS)	FACTORED VERT. LOAD (PLF) FROM	TO	LC1	MAX CSI (LC)	MAX. UNBRAC LENGTH
N- A	-232 / 0	0.0	0.0	0.01 (1)	7.81	
A- B	-44 / 0	-156.6	-156.6	0.01 (1)	6.25	
B- C	-57 / 0	-156.6	-156.6	0.01 (1)	6.25	
C- D	-49 / 0	-156.6	-156.6	0.01 (1)	6.25	
D- E	-52 / 0	-156.6	-156.6	0.01 (1)	6.25	
E- F	-62 / 0	-156.6	-156.6	0.01 (1)	6.25	
F- G	-26 / 0	-156.6	-156.6	0.01 (1)	6.25	
H- G	-245 / 0	0.0	0.0	0.01 (1)	7.81	
N- O	0 / 544	-17.5	-17.5	0.10 (1)	6.25	
O- M	0 / 544	-17.5	-17.5	0.10 (1)	6.25	
M- P	-220 / 0	-17.5	-17.5	0.09 (1)	6.25	
P- L	-220 / 0	-17.5	-17.5	0.09 (1)	6.25	
L- Q	0 / 280	-17.5	-17.5	0.09 (1)	6.25	
Q- K	0 / 280	-17.5	-17.5	0.09 (1)	6.25	
K- R	0 / 23	-17.5	-17.5	0.11 (1)	6.25	
R- J	0 / 23	-17.5	-17.5	0.11 (1)	6.25	
J- S	-174 / 0	-17.5	-17.5	0.09 (1)	6.25	
S- I	-174 / 0	-17.5	-17.5	0.09 (1)	6.25	
I- T	0 / 605	-17.5	-17.5	0.10 (1)	6.25	
T- H	0 / 605	-17.5	-17.5	0.10 (1)	6.25	

WEBS

MEMB. FR-TO	MAX. FACTORED FORCE (LBS)	MAX CSI (LC)
A- M	0 / 59	0.00 (1)
M- B	-523 / 0	0.01 (1)
B- L	-15 / 0	0.00 (1)
L- C	-478 / 0	0.01 (1)
C- K	-25 / 0	0.00 (1)
K- D	-361 / 0	0.01 (1)
K- E	-29 / 0	0.00 (1)
J- E	-534 / 0	0.01 (1)
J- F	0 / 3	0.00 (4)
I- F	-589 / 0	0.01 (1)
I- G	0 / 47	0.00 (1)

FACTORED CONCENTRATED LOADS (LBS)

JT	LOC.	LC1	MAX-	MAX+	FACE	DIR.	TYPE	HEEL	CONN.
J	12-3-6	-2457	-2457	---	BACK	VERT	TOTAL	---	C1
L	6-3-6	-2457	-2457	---	BACK	VERT	TOTAL	---	C1
O	2-3-6	-2457	-2457	---	BACK	VERT	TOTAL	---	C1
P	4-3-6	-2457	-2457	---	BACK	VERT	TOTAL	---	C1
Q	8-3-6	-2459	-2459	---	BACK	VERT	TOTAL	---	C1
R	10-3-6	-2457	-2457	---	BACK	VERT	TOTAL	---	C1
S	14-3-6	-2457	-2457	---	BACK	VERT	TOTAL	---	C1
T	16-3-6	-2457	-2457	---	TOP	VERT	TOTAL	---	C1

CONNECTION REQUIREMENTS

1) **C1:** A SUITABLE HANGER/MECHANICAL CONNECTION IS REQUIRED.

COMPANION LIVE LOAD FACTOR = 1.00

TRUSS PLATE MANUFACTURER IS NOT RESPONSIBLE FOR QUALITY CONTROL IN THE TRUSS MANUFACTURING PLANT .

NAIL VALUES

PLATE	GRIP(DRY) (PSI) MAX	MIN	SHEAR (PLI) MAX	MIN	SECTION (PLI) MAX	MIN
MT20	650	371	1747	788	1987	1873

PLATE PLACEMENT TOL. = 0.250 inches

PLATE ROTATION TOL. = 5.0 Deg.

JSI GRIP= 0.39 (K) (INPUT = 0.90)
JSI METAL= 0.21 (K) (INPUT = 1.00)

JOB NAME	TRUSS NAME	QUANTITY	PLY	JOB DESC. Woodcreek / Adkins	DRWG NO.
211770	G9	1	3	TRUSS DESC.	

KAMLOOPS TRUSS LTD., Kamloops, BC V2H 1G3

Version 8.420 S Mar 22 2021 MiTek Industries, Inc. Thu May 27 07:06:45 2021 Page 1

ID:X2qvwXGfFYBXzZFl6ldjmRzCaiR-2VKH?6KTio7EvWtHy1WAIszHsEmcvjaGjA7NRyzCLW8

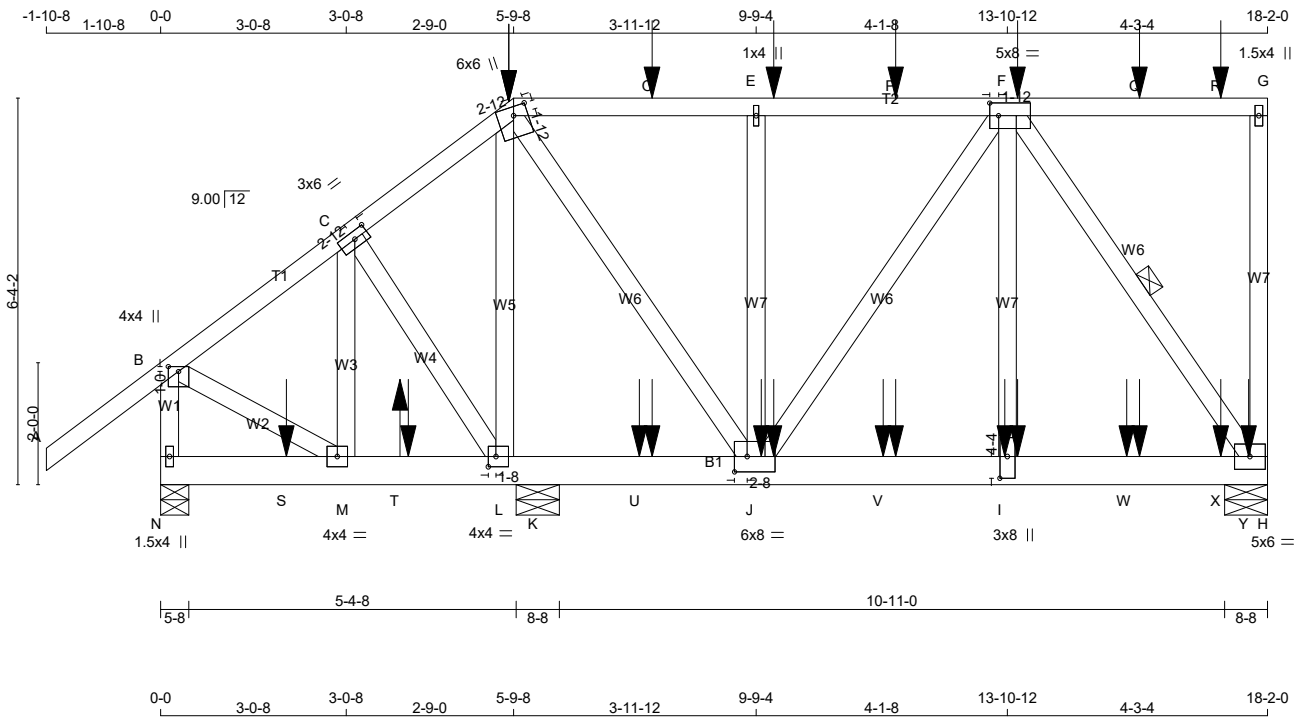

TOTAL WEIGHT = 3 X 126 = 379 lb

[M]

LUMBER

N. L. G. A. RULES

CHORDS	SIZE		LUMBER	DESCR.
A - D	2x4	DRY	1650F 1.5E	SPF
D - G	2x4	DRY	1650F 1.5E	SPF
H - G	2x4	DRY	1650F 1.5E	SPF
N - B	2x4	DRY	1650F 1.5E	SPF
N - H	2x6	DRY	2400F 2.0E	DF

ALL WEBS

DIMENSIONS, SUPPORTS AND LOADINGS SPECIFIED BY FABRICATOR TO BE VERIFIED BY BUILDING DESIGNER

BEARINGS

	FACTORED GROSS REACTION		MAXIMUM FACTORED GROSS REACTION			INPUT BRG	REQRD BRG
JT	VERT	HORZ	DOWN	HORZ	UPLIFT	IN-SX	IN-SX
H	9853	0	9853	0	0	8-8	3-9
N	1498	0	1498	0	-37	5-8	1-8
K	7374	0	7374	0	0	8-8	2-11

PROVIDE ANCHORAGE AT BEARING JOINT N FOR 150 LBS FACTORED UPLIFT

UNFACTORED REACTIONS

	1ST LCASE	MAX./MIN. COMPONENT REACTIONS					
JT	COMBINED	SNOW	LIVE	PERM.LIVE	WIND	DEAD	SOIL
H	6788	5470 / 0	0 / 0	0 / 0	0 / 0	1319 / 0	0 / 0
N	1005	965 / -59	0 / 0	0 / 0	0 / 0	40 / 0	0 / 0
K	5055	4221 / -74	0 / 0	0 / 0	0 / 0	835 / 0	0 / 0

BEARING MATERIAL TO BE SPF NO.2 OR BETTER AT JOINT(S) H, N, K

BRACING

TOP CHORD TO BE SHEATHED OR MAX. PURLIN SPACING = 5.85 FT.
MAX. UNBRACED BOTTOM CHORD LENGTH = 6.25 FT OR RIGID CEILING DIRECTLY APPLIED.

ALL PITCH BREAKS AND PERIMETER CORNER JOINTS MUST BE LATERALLY RESTRAINED.

1 LATERAL BRACE(S) AT 1/ 2 LENGTH OF F-H.

END VERTICAL(S) MUST BE SHEATHED OR HAVE BRACES AS INDICATED IN
THE MAX. UNBRACED LENGTH COLUMN OF THE TABLE BELOW

DESIGN CRITERIA

SPECIFIED LOADS:

TOP CH.	LL	=	48.1	PSF
	DL	=	5.0	PSF
BOT CH.	LL	=	0.0	PSF
	DL	=	7.0	PSF
TOTAL LOAD		=	60.0	PSF

SPACING = 24.0 IN. C/C

LOADING IN FLAT SECTION BASED ON A SLOPE OF 6.00/12

THIS TRUSS IS DESIGNED FOR RESIDENTIAL OR SMALL BUILDING
REQUIREMENTS OF PART 9, NBCC 2015

THIS DESIGN COMPLIES WITH:
- PART 9 OF BCBC 2018 , ABC 2019
- PART 9 OF OBC 2012 (2019 AMENDMENT)
- CSA 086-14
- TPIC 2014

(55 % OF 83.6 P.S.F. G.S.L. PLUS 2.1 P.S.F. RAIN LOAD) EQUALS 48.1
P.S.F. SPECIFIED ROOF LIVE LOAD

ALLOWABLE DEFL.(LL)= L/180 (0.80")
CALCULATED VERT. DEFL.(LL) = L/ 999 (0.04")
ALLOWABLE DEFL.(TL)= L/180 (0.80")
CALCULATED VERT. DEFL.(TL) = L/ 999 (0.07")

CONTINUED ON PAGE 2

JOB NAME	TRUSS NAME	QUANTITY	PLY	JOB DESC. Woodcreek / Adkins	DRWG NO.
211770	G9	1	3	TRUSS DESC.	

KAMLOOPS TRUSS LTD., Kamloops, BC V2H 1G3

Version 8.420 S Mar 22 2021 MiTek Industries, Inc. Thu May 27 07:06:45 2021 Page 2

ID:X2qvwXGfFYBXzZFI6ldjmRzCaiR-2VKH?6KTio7EvWtHy1WAIszHsEmcvjaGjA7NRyzCLW8

NOTES

DRY: SEASONED LUMBER.

DESIGN CONSISTS OF **3** TRUSSES BUILT SEPARATELY THEN FASTENED TOGETHER AS FOLLOWS:

CHORDS	#ROWS	SURFACE SPACING (IN)	LOAD(PLF)
TOP CHORDS : (0.122"X3") SPIRAL NAILS			
A- D	1	12	SIDE(80.9)
D- G	1	12	SIDE(73.4)
G- H	1	12	TOP
N- B	1	12	TOP
BOTTOM CHORDS : (0.122"X3") SPIRAL NAILS			
N- H	2	5	SIDE(1349.7)
WEBS : (0.122"X3") SPIRAL NAILS			
2x4	1	6	

STAGGER NAILS BY HALF THE SURFACE SPACING IN ADJACENT PLIES.

GIRDER NAILING ASSUMES NAILED HANGERS ARE FASTENED WITH MIN. 3-0 INCH NAILS.

TOP - COMPONENTS ARE LOADED FROM THE TOP AND MUST BE PLACED ON TOP EDGE OF ALL PLIES FOR THE LOAD TO BE TRANSFERRED TO EACH PLY.

SIDE - PLF SHOWN IS THE EQUIVALENT UDL APPLIED TO ONE SIDE THAT THE CORRESPONDING NAILING PATTERN SHALL BE CAPABLE OF TRANSFERING. REMAINING PLF MUST BE APPLIED ON THE OPPOSITE SIDE OR ON THE TOP.

PLATES (table is in inches)

JT	TYPE	PLATES	W	LEN	Y	X
B	TMVW+p	MT20	4.0	4.0	1.00	2.00
C	TMWW-t	MT20	3.0	6.0	1.50	2.75
D	TTWW+m	MT20	6.0	6.0	1.75	2.75
E	TMW+w	MT20	1.0	4.0		
F	TMWWW-t	MT20	5.0	8.0	2.50	1.75
G	TMV+p	MT20	1.5	4.0		
H	BMVW1-t	MT20	5.0	6.0		
I	BMW+w	MT20	3.0	8.0	4.25	1.50
J	BMWWW-t	MT20	6.0	8.0	3.00	2.50
L	BMWW-t	MT20	4.0	4.0	2.00	1.50
M	BMWW-t	MT20	4.0	4.0		
N	BMV1+p	MT20	1.5	4.0		

LOADING

TOTAL LOAD CASES: (7)

CHORDS

MEMB. FR-TO	MAX. FACTORED FORCE (LBS)	FACTORED VERT. LOAD (PLF) FROM	TO	LC1	MAX CSI (LC)	MAX. UNBRAC LENGTH
A- B	0 / 92	-156.6	-156.6	0.12 (1)	10.00	
B- C	-936 / 703	-156.6	-156.6	0.10 (5)	6.25	
C- D	-896 / 69	-156.6	-156.6	0.07 (1)	6.25	
D- O	-4342 / 0	-156.6	-156.6	0.13 (1)	5.90	
O- E	-4342 / 0	-156.6	-156.6	0.13 (1)	5.90	
E- P	-4343 / 0	-156.6	-156.6	0.17 (1)	5.85	
P- F	-4343 / 0	-156.6	-156.6	0.17 (1)	5.85	
F- Q	0 / 0	-156.6	-156.6	0.16 (1)	10.00	
Q- R	0 / 0	-156.6	-156.6	0.16 (1)	10.00	
R- G	0 / 0	-156.6	-156.6	0.16 (1)	10.00	
H- G	-481 / 0	0.0	0.0	0.09 (1)	7.81	
N- B	-1473 / 194	0.0	0.0	0.03 (1)	7.81	
N- S	0 / 0	-17.5	-17.5	0.04 (5)	10.00	
S- M	0 / 0	-17.5	-17.5	0.04 (5)	10.00	
M- T	-533 / 779	-17.5	-17.5	0.13 (5)	6.25	
T- L	-533 / 779	-17.5	-17.5	0.13 (5)	6.25	
L- K	-33 / 823	-17.5	-17.5	0.26 (1)	6.25	
K- U	-33 / 823	-17.5	-17.5	0.26 (1)	6.25	
U- J	-33 / 823	-17.5	-17.5	0.26 (1)	6.25	
J- V	0 / 4606	-17.5	-17.5	0.22 (1)	10.00	
V- I	0 / 4606	-17.5	-17.5	0.22 (1)	10.00	
I- W	0 / 4606	-17.5	-17.5	0.28 (1)	10.00	
W- X	0 / 4606	-17.5	-17.5	0.28 (1)	10.00	
X- Y	0 / 4606	-17.5	-17.5	0.28 (1)	10.00	
Y- H	0 / 4606	-17.5	-17.5	0.28 (1)	10.00	

WEBS

MEMB. FR-TO	MAX. FACTORED FORCE (LBS)	MAX CSI (LC)
M- C	-1577 / 0	0.07 (5)
C- L	-176 / 798	0.03 (5)
L- D	-5817 / 0	0.60 (1)
D- J	0 / 6332	0.25 (1)
J- E	-1003 / 0	0.11 (1)
J- F	-462 / 0	0.08 (1)
I- F	0 / 5661	0.22 (1)
F- H	-7915 / 0	0.46 (1)
B- M	-601 / 879	0.03 (1)

FACTORED CONCENTRATED LOADS (LBS)

JT	LOC.	LC1	MAX-	MAX+	FACE	DIR.	TYPE	HEEL	CONN.
D	5-9-8	-591	-591	---	FRONT	VERT	TOTAL	---	C1
E	10-0-12	-169	-169	---	FRONT	VERT	TOTAL	---	C1
F	14-0-12	-169	-169	---	FRONT	VERT	TOTAL	---	C1
I	13-10-4	-2325	-2325	---	BACK	VERT	TOTAL	---	C1
I	14-0-12	-25	-25	---	FRONT	VERT	TOTAL	---	C1
J	9-10-4	-2325	-2325	---	BACK	VERT	TOTAL	---	C1
J	10-0-12	-25	-25	---	FRONT	VERT	TOTAL	---	C1
O	8-0-12	-169	-169	---	FRONT	VERT	TOTAL	---	C1
P	12-0-12	-169	-169	---	FRONT	VERT	TOTAL	---	C1
Q	16-0-12	-169	-169	---	FRONT	VERT	TOTAL	---	C1
R	17-4-12	-187	-187	---	FRONT	VERT	TOTAL	---	C1
S	2-0-12	-20	-23	---	FRONT	VERT	TOTAL	---	C1
T	3-11-2	494	1	2732	BACK	VERT	TOTAL	---	C1
T	4-0-12	-26	-26	---	FRONT	VERT	TOTAL	---	C1
U	7-10-4	-2313	-2313	---	BACK	VERT	TOTAL	---	C1
U	8-0-12	-25	-25	---	FRONT	VERT	TOTAL	---	C1
V	11-10-4	-2325	-2325	---	BACK	VERT	TOTAL	---	C1
V	12-0-12	-25	-25	---	FRONT	VERT	TOTAL	---	C1
W	15-10-4	-2309	-2309	---	BACK	VERT	TOTAL	---	C1
W	16-0-12	-25	-25	---	FRONT	VERT	TOTAL	---	C1
X	17-4-12	-27	-27	---	FRONT	VERT	TOTAL	---	C1
Y	17-10-4	-2329	-2329	---	BACK	VERT	TOTAL	---	C1

CONNECTION REQUIREMENTS

1) **C1:** A SUITABLE HANGER/MECHANICAL CONNECTION IS REQUIRED.

CSI: TC=0.17/1.00 (E-F:1) , BC=0.28/1.00 (H-I:1) , WB=0.60/1.00 (D-L:1) , SSI=0.88/1.00 (K-L:1)

DOL LUMBER=1.00 NAIL=1.00 LS BEND=1.10 COMP=1.10 SHEAR=1.10 TENS= 1.10

COMPANION LIVE LOAD FACTOR = 1.00

TRUSS PLATE MANUFACTURER IS NOT RESPONSIBLE FOR QUALITY CONTROL IN THE TRUSS MANUFACTURING PLANT .

NAIL VALUES

PLATE	GRIP(DRY) (PSI) MAX	MIN	SHEAR (PLI) MAX	MIN	SECTION (PLI) MAX	MIN
MT20	650	371	1747	788	1987	1873

PLATE PLACEMENT TOL. = 0.250 inches

PLATE ROTATION TOL. = 5.0 Deg.

JSI GRIP= 0.90 (J) (INPUT = 0.90)
JSI METAL= 0.53 (I) (INPUT = 1.00)

JOB NAME	TRUSS NAME	QUANTITY	PLY	JOB DESC. Woodcreek / Adkins	DRWG NO.
211770	GE1	2	1	TRUSS DESC.	

KAMLOOPS TRUSS LTD., Kamloops, BC V2H 1G3

ID:X2qvwXGfFYBXzZFl6ldjmRzCaiR- uS1QoMjEPNy9q0f3SZeNH3fz2V7NqDZAUcUVqzCLW6

Scale = 1:47.0

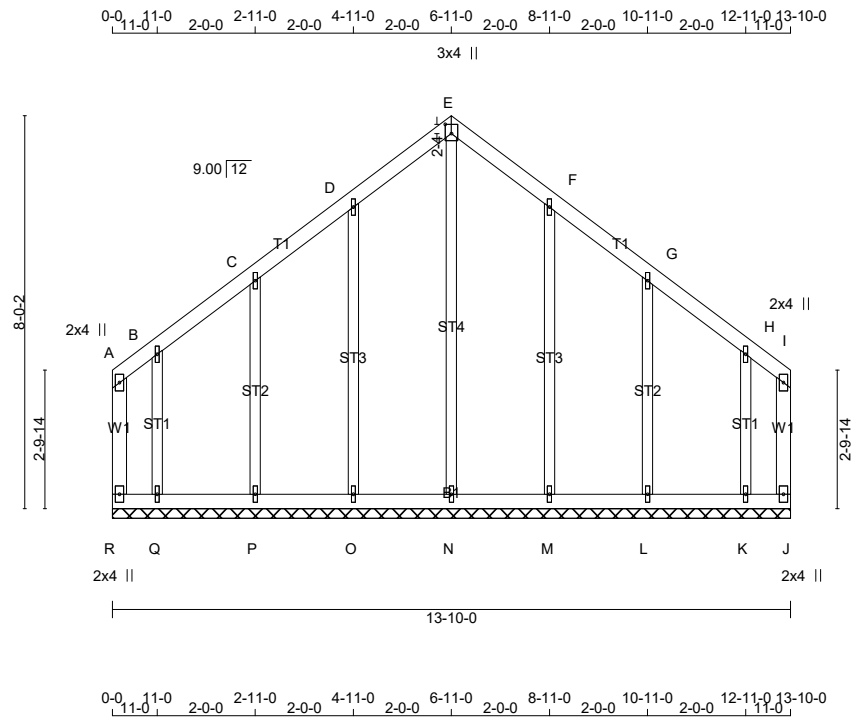

TOTAL WEIGHT = 2 X 69 = 138 lb [M]

LUMBER

N. L. G. A. RULES

CHORDS	SIZE		LUMBER	DESCR.
R - A	2x4	DRY	1650F 1.5E	SPF
A - E	2x4	DRY	1650F 1.5E	SPF
E - I	2x4	DRY	1650F 1.5E	SPF
J - I	2x4	DRY	1650F 1.5E	SPF
R - J	2x4	DRY	1650F 1.5E	SPF

ALL WEBS

DIMENSIONS, SUPPORTS AND LOADINGS SPECIFIED BY FABRICATOR TO BE VERIFIED BY BUILDING DESIGNER

BEARINGS

THIS TRUSS DESIGNED FOR CONTINUOUS BEARINGS.

THIS TRUSS REQUIRES RIGID SHEATHING ON EXPOSED FACE.

BEARING MATERIAL TO BE SPF NO.2 OR BETTER AT JOINT(S)

BRACING

TOP CHORD TO BE SHEATHED OR MAX. PURLIN SPACING = 10.00 FT.
MAX. UNBRACED BOTTOM CHORD LENGTH = 10.00 FT OR RIGID CEILING DIRECTLY APPLIED.

ALL PITCH BREAKS AND PERIMETER CORNER JOINTS MUST BE LATERALLY RESTRAINED.

LOADING

TOTAL LOAD CASES: (4)

CHORDS

MEMB. FR-TO	MAX. FACTORED FORCE (LBS)	FACTORED VERT. LOAD (PLF) FROM	TO	LC1	MAX CSI (LC)	MAX. UNBRAC LENGTH
R- A	-55 / 0	0.0	0.0	0.02 (1)		7.81
A- B	-4 / 0	-156.6	-156.6	0.04 (1)		10.00
B- C	-1 / 0	-156.6	-156.6	0.06 (1)		10.00
C- D	0 / 0	-156.6	-156.6	0.06 (1)		10.00
D- E	0 / 5	-156.6	-156.6	0.06 (1)		10.00
E- F	0 / 5	-156.6	-156.6	0.06 (1)		10.00
F- G	0 / 0	-156.6	-156.6	0.06 (1)		10.00
G- H	-1 / 0	-156.6	-156.6	0.06 (1)		10.00
H- I	-4 / 0	-156.6	-156.6	0.04 (1)		10.00

WEBS

MEMB. FR-TO	MAX. FACTORED FORCE (LBS)	MAX CSI (LC)
N- E	-333 / 0	0.40 (1)
O- D	-317 / 0	0.22 (1)
P- C	-320 / 0	0.12 (1)
Q- B	-225 / 0	0.05 (1)
M- F	-317 / 0	0.22 (1)
L- G	-320 / 0	0.12 (1)
K- H	-225 / 0	0.05 (1)

DESIGN CRITERIA

SPECIFIED LOADS:

TOP CH.	LL	=	48.1	PSF
	DL	=	5.0	PSF
BOT CH.	LL	=	0.0	PSF
	DL	=	7.0	PSF
TOTAL LOAD		=	60.0	PSF

SPACING = 24.0 IN. C/C

THIS TRUSS IS DESIGNED FOR RESIDENTIAL OR SMALL BUILDING REQUIREMENTS OF PART 9, NBCC 2015

THIS DESIGN COMPLIES WITH:
- PART 9 OF BCBC 2018 , ABC 2019
- PART 9 OF OBC 2012 (2019 AMENDMENT)
- CSA 086-14
- TPIC 2014

(55 % OF 83.6 P.S.F. G.S.L. PLUS 2.1 P.S.F. RAIN LOAD) EQUALS 48.1 P.S.F. SPECIFIED ROOF LIVE LOAD

CSI: TC=0.06/1.00 (D-E:1) , BC=0.02/1.00 (J-K:1) , WB=0.40/1.00 (E-N:1) , SSI=0.10/1.00 (G-H:1)

DOL LUMBER=1.00 NAIL=1.00 LS BEND=1.10 COMP=1.10 SHEAR=1.10 TENS= 1.10

CONTINUED ON PAGE 2

JOB NAME	TRUSS NAME	QUANTITY	PLY	JOB DESC. Woodcreek / Adkins	DRWG NO.
211770	GE1	2	1	TRUSS DESC.	

KAMLOOPS TRUSS LTD., Kamloops, BC V2H 1G3

ID:X2qvwXGfFYBXzZFl6ldjmRzCaiR-_uS1QoMjEPNy9q0f3SZeNH3fz2V7NgDZAUcUVqzCLW6

BEARINGS
ALL GABLE WEBS
BEARING

DRY: SEASONED LUMBER.

GABLE STUDS SPACED AT 2-0-0 OC.

PLATES (table is in inches)

JT	TYPE	PLATES	W	LEN	Y	X
A	TMV+p	MT20	2.0	4.0		
B, C, D, F, G, H						
B	TMW+w	MT20	1.0	4.0		
E	TTW+p	MT20	3.0	4.0	2.25	1.50
I	TMV+p	MT20	2.0	4.0		
J	BMV1+p	MT20	2.0	4.0		
K, L, M, N, O, P, Q						
K	BMW1+w	MT20	1.0	4.0		
R	BMV1+p	MT20	2.0	4.0		

LOADING
TOTAL LOAD CASES: (4)

CHORDS

MEMB. FR-TO	MAX. FACTORED FORCE (LBS)	VERT. LOAD LC1 (PLF) FROM	TO	MAX CSI (LC)	MAX. UNBRAC LENGTH
J- I	-55 / 0	0.0	0.0	0.02 (1)	7.81
R- Q	0 / 13	-17.5	-17.5	0.02 (1)	10.00
Q- P	0 / 6	-17.5	-17.5	0.01 (4)	10.00
P- O	0 / 0	-17.5	-17.5	0.01 (4)	10.00
O- N	-4 / 0	-17.5	-17.5	0.01 (4)	10.00
N- M	-4 / 0	-17.5	-17.5	0.01 (4)	10.00
M- L	0 / 0	-17.5	-17.5	0.01 (4)	10.00
L- K	0 / 6	-17.5	-17.5	0.01 (4)	10.00
K- J	0 / 13	-17.5	-17.5	0.02 (1)	10.00

WEBS

MEMB. FR-TO	MAX. FACTORED FORCE (LBS)	MAX CSI (LC)

COMPANION LIVE LOAD FACTOR = 1.00

TRUSS PLATE MANUFACTURER IS NOT RESPONSIBLE FOR QUALITY CONTROL IN THE TRUSS MANUFACTURING PLANT .

NAIL VALUES

PLATE	GRIP(DRY) (PSI) MAX	MIN	SHEAR (PLI) MAX	MIN	SECTION (PLI) MAX	MIN
MT20	650	371	1747	788	1987	1873

PLATE PLACEMENT TOL. = 0.250 inches

PLATE ROTATION TOL. = 5.0 Deg.

JSI GRIP= 0.42 (C) (INPUT = 0.90)
JSI METAL= 0.34 (C) (INPUT = 1.00)

JOB NAME	TRUSS NAME	QUANTITY	PLY	JOB DESC. Woodcreek / Adkins	DRWG NO.
211770	GE2	1	1	TRUSS DESC.	

KAMLOOPS TRUSS LTD., Kamloops, BC V2H 1G3

Version 8.420 S Mar 22 2021 MiTek Industries, Inc. Thu May 27 07:06:49 2021 Page 1

ID:X2qvwXGfFYBXzZFl6ldjmRzCaiR-wGZorUNzl0egO8A2Btb6Si8?TrBarcoseo5bajzCLW4

Scale = 1:45.3

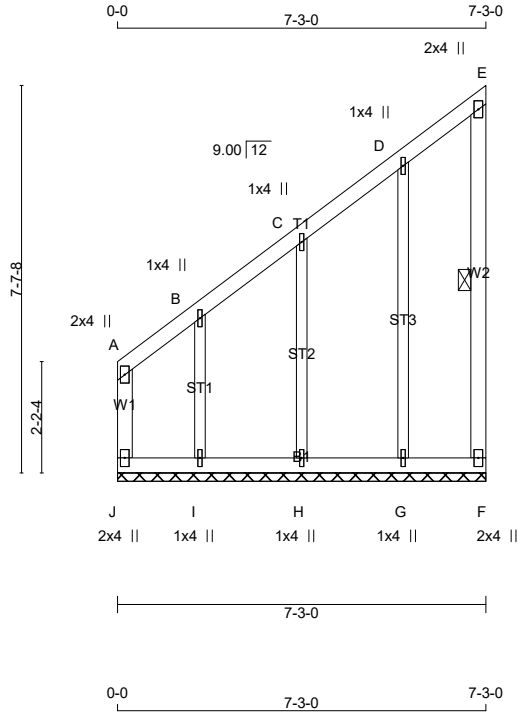

TOTAL WEIGHT = 39 lb

LUMBER

N. L. G. A. RULES

CHORDS	SIZE		LUMBER	DESCR.
J - A	2x4	DRY	1650F 1.5E	SPF
A - E	2x4	DRY	1650F 1.5E	SPF
F - E	2x4	DRY	1650F 1.5E	SPF
J - F	2x4	DRY	1650F 1.5E	SPF
ALL WEBS	2x3	DRY	No.2	SPF

DIMENSIONS, SUPPORTS AND LOADINGS SPECIFIED BY FABRICATOR TO BE VERIFIED BY BUILDING DESIGNER

BEARINGS

THIS TRUSS DESIGNED FOR CONTINUOUS BEARINGS.

THIS TRUSS REQUIRES RIGID SHEATHING ON EXPOSED FACE.

BEARING MATERIAL TO BE SPF NO.2 OR BETTER AT JOINT(S)

BRACING

TOP CHORD TO BE SHEATHED OR MAX. PURLIN SPACING = 6.25 FT.
MAX. UNBRACED BOTTOM CHORD LENGTH = 10.00 FT OR RIGID CEILING DIRECTLY APPLIED.

ALL PITCH BREAKS AND PERIMETER CORNER JOINTS MUST BE LATERALLY RESTRAINED.

1 LATERAL BRACE(S) AT 1/ 2 LENGTH OF E-F.

END VERTICAL(S) MUST BE SHEATHED OR HAVE BRACES AS INDICATED IN
THE MAX. UNBRACED LENGTH COLUMN OF THE TABLE BELOW

LOADING

TOTAL LOAD CASES: (4)

C H O R D S

MEMB. FR-TO	MAX. FACTORED FORCE (LBS)	FACTORED VERT. LOAD LC1 (PLF) FROM	TO	MAX CSI (LC)	MAX. UNBRAC LENGTH
J- A	-125 / 0	0.0	0.0	0.03 (1)	7.81
A- B	-19 / 0	-156.6	-156.6	0.05 (1)	6.25
B- C	-12 / 0	-156.6	-156.6	0.06 (1)	6.25
C- D	-12 / 0	-156.6	-156.6	0.06 (1)	6.25

W E B S

MEMB. FR-TO	MAX. FACTORED FORCE (LBS)	MAX CSI (LC)
H- C	-321 / 0	0.11 (1)
I- B	-276 / 0	0.06 (1)
G- D	-301 / 0	0.20 (1)

[M]

DESIGN CRITERIA

SPECIFIED LOADS:

TOP CH.	LL	=	48.1	PSF
	DL	=	5.0	PSF
BOT CH.	LL	=	0.0	PSF
	DL	=	7.0	PSF
TOTAL LOAD		=	60.0	PSF

SPACING = 24.0 IN. C/C

THIS TRUSS IS DESIGNED FOR RESIDENTIAL OR SMALL BUILDING REQUIREMENTS OF PART 9, NBCC 2015

THIS DESIGN COMPLIES WITH:
- PART 9 OF BCBC 2018 , ABC 2019
- PART 9 OF OBC 2012 (2019 AMENDMENT)
- CSA 086-14
- TPIC 2014

(55 % OF 83.6 P.S.F. G.S.L. PLUS 2.1 P.S.F. RAIN LOAD) EQUALS 48.1 P.S.F. SPECIFIED ROOF LIVE LOAD

CSI: TC=0.06/1.00 (B-C:1) , BC=0.02/1.00 (I-J:1) , WB=0.20/1.00 (D-G:1) , SSI=0.10/1.00 (B-C:1)

DOL LUMBER=1.00 NAIL=1.00 LS BEND=1.10 COMP=1.10 SHEAR=1.10 TENS= 1.10

CONTINUED ON PAGE 2

JOB NAME	TRUSS NAME	QUANTITY	PLY	JOB DESC. Woodcreek / Adkins	DRWG NO.
211770	GE2	1	1	TRUSS DESC.	

ALL GABLE WEBS
ARE DRY

DRY: SEASONED LUMBER.

GABLE STUDS SPACED AT 2-0-0 OC.

PLATES (table is in inches)

JT	TYPE	PLATES	W	LEN	Y	X
A	TMV+p	MT20	2.0	4.0		
B, C, D						
B	TMW+w	MT20	1.0	4.0		
E	TMV+p	MT20	2.0	4.0		
F	BMV1+p	MT20	2.0	4.0		
G, H, I						
G	BMW1+w	MT20	1.0	4.0		
J	BMV1+p	MT20	2.0	4.0		

LOADING
TOTAL LOAD CASES: (4)

C H O R D S

MEMB. FR-TO	MAX. FACTORED FORCE (LBS)	FROM	VERT. LOAD LC1 (PLF) TO	MAX CSI (LC)	MAX. UNBRAC LENGTH
D- E	-14 / 0	-156.6	-156.6	0.05 (1)	6.25
F- E	-113 / 0	0.0	0.0	0.01 (1)	6.25
J- I	0 / 21	-17.5	-17.5	0.02 (1)	10.00
I- H	0 / 13	-17.5	-17.5	0.01 (4)	10.00
H- G	0 / 7	-17.5	-17.5	0.01 (4)	10.00
G- F	0 / 2	-17.5	-17.5	0.01 (4)	10.00

W E B S

MEMB. FR-TO	MAX. FACTORED FORCE (LBS)	MAX CSI (LC)

COMPANION LIVE LOAD FACTOR = 1.00

TRUSS PLATE MANUFACTURER IS NOT RESPONSIBLE FOR QUALITY CONTROL IN THE TRUSS MANUFACTURING PLANT .

NAIL VALUES

PLATE	GRIP(DRY) (PSI) MAX	MIN	SHEAR (PLI) MAX	MIN	SECTION (PLI) MAX	MIN
MT20	650	371	1747	788	1987	1873

PLATE PLACEMENT TOL. = 0.250 inches

PLATE ROTATION TOL. = 5.0 Deg.

JSI GRIP= 0.42 (C) (INPUT = 0.90)
JSI METAL= 0.34 (C) (INPUT = 1.00)

JOB NAME	TRUSS NAME	QUANTITY	PLY	JOB DESC.	DRWG NO.
211770	GE3	1	1	Woodcreek / Adkins TRUSS DESC.	

KAMLOOPS TRUSS LTD., Kamloops, BC V2H 1G3

Version 8.420 S Mar 22 2021 MiTek Industries, Inc. Thu May 27 07:06:51 2021 Page 1

ID:X2qvwXGfFYBXzZFl6ldjmRzCaiR-tfhYG9PDHeuOdRKRIIdaX7DKffs5JTk856aiebzCLW2

Scale = 1:57.1

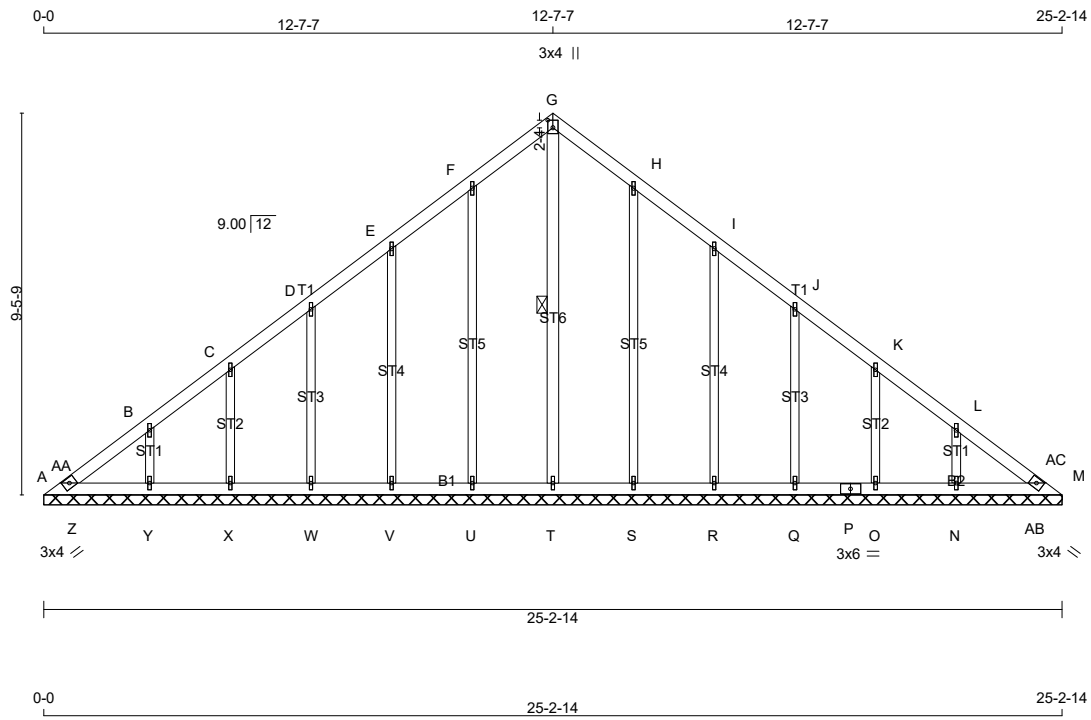

TOTAL WEIGHT = 109 lb [M]

LUMBER

N. L. G. A. RULES

CHORDS	SIZE		LUMBER	DESCR.
A - G	2x4	DRY	1650F 1.5E	SPF
G - M	2x4	DRY	1650F 1.5E	SPF
A - P	2x4	DRY	1650F 1.5E	SPF
P - M	2x4	DRY	1650F 1.5E	SPF
ALL WEBS	2x3	DRY	No.2	SPF

DIMENSIONS, SUPPORTS AND LOADINGS SPECIFIED BY FABRICATOR TO BE VERIFIED BY BUILDING DESIGNER

BEARINGS

THIS TRUSS DESIGNED FOR CONTINUOUS BEARINGS.

THIS TRUSS REQUIRES RIGID SHEATHING ON EXPOSED FACE.

BEARING MATERIAL TO BE SPF NO.2 OR BETTER AT JOINT(S)

BRACING

TOP CHORD TO BE SHEATHED OR MAX. PURLIN SPACING = 6.25 FT.
MAX. UNBRACED BOTTOM CHORD LENGTH = 6.25 FT OR RIGID CEILING DIRECTLY APPLIED.

ALL PITCH BREAKS AND PERIMETER CORNER JOINTS MUST BE LATERALLY RESTRAINED.

1 LATERAL BRACE(S) AT 1/ 2 LENGTH OF G-T.

LOADING

TOTAL LOAD CASES: (4)

CHORDS

MEMB. FR-TO	MAX. FORCE (LBS)	FACTORED VERT. LOAD (PLF) FROM	TO	LC1 CSI (LC)	MAX UNBRAC LENGTH
A-AA	-52 / 0	-156.6	-156.6	0.03 (1)	6.25
AA- B	-6 / 6	-156.6	-156.6	0.08 (1)	10.00
B- C	-24 / 1	-156.6	-156.6	0.08 (1)	6.25
C- D	-4 / 4	-156.6	-156.6	0.06 (1)	10.00
D- E	0 / 4	-156.6	-156.6	0.06 (1)	10.00
E- F	0 / 12	-156.6	-156.6	0.07 (1)	10.00
F- G	-6 / 4	-156.6	-156.6	0.07 (1)	10.00

WEBS

MEMB. FR-TO	MAX. FORCE (LBS)	MAX CSI (LC)
T- G	-281 / 0	0.09 (1)
U- F	-354 / 0	0.43 (1)
V- E	-302 / 0	0.21 (1)
W- D	-313 / 0	0.11 (1)
X- C	-291 / 0	0.06 (1)
Y- B	-351 / 0	0.05 (1)
S- H	-354 / 0	0.43 (1)

DESIGN CRITERIA

SPECIFIED LOADS:

TOP CH.	LL	=	48.1	PSF
	DL	=	5.0	PSF
BOT CH.	LL	=	0.0	PSF
	DL	=	7.0	PSF
TOTAL LOAD		=	60.0	PSF

SPACING = 24.0 IN. C/C

THIS TRUSS IS DESIGNED FOR RESIDENTIAL OR SMALL BUILDING REQUIREMENTS OF PART 9, NBCC 2015

THIS DESIGN COMPLIES WITH:
- PART 9 OF BCBC 2018 , ABC 2019
- PART 9 OF OBC 2012 (2019 AMENDMENT)
- CSA 086-14
- TPIC 2014

(55 % OF 83.6 P.S.F. G.S.L. PLUS 2.1 P.S.F. RAIN LOAD) EQUALS 48.1 P.S.F. SPECIFIED ROOF LIVE LOAD

CSI: TC=0.08/1.00 (B-C:1) , BC=0.08/1.00 (Y-Z:1) , WB=0.43/1.00 (H-S:1) , SSI=0.12/1.00 (L-AC:1)

DOL LUMBER=1.00 NAIL=1.00 LS BEND=1.10 COMP=1.10 SHEAR=1.10 TENS= 1.10

CONTINUED ON PAGE 2

JOB NAME	TRUSS NAME	QUANTITY	PLY	JOB DESC. Woodcreek / Adkins	DRWG NO.
211770	GE3	1	1	TRUSS DESC.	

KAMLOOPS TRUSS LTD., Kamloops, BC V2H 1G3

ID:X2qvwXGfFYBXzZFl6ldjmRzCaiR-tfhYG9PDHeuOdRKRIIdaX7DKffs5JTk856aiebzCLW2

ALL WEBS
EXCEPT
DRY: SEASONED LUMBER.

ALL GABLE WEBS
EXCEPT
DRY: SEASONED LUMBER.

GABLE STUDS SPACED AT 2-0-0 OC.

PLATES (table is in inches)

JT	TYPE	PLATES	W	LEN	Y	X
A	TBM1-h	MT20	3.0	4.0		
B, C, D, E, F, H, I, J, K, L						
B	TMW+w	MT20	1.0	4.0		
G	TTW+p	MT20	3.0	4.0	2.25	1.50
M	TBM1-h	MT20	3.0	4.0		
N, O, Q, R, S, T, U, V, W, X, Y						
N	BMW1+w	MT20	1.0	4.0		
P	BS-t	MT20	3.0	6.0		

LOADING

TOTAL LOAD CASES: (4)

CHORDS

MEMB. FR-TO	MAX. FACTORED FORCE (LBS)	FACTORED VERT. LOAD LC1 (PLF) FROM	TO	MAX CSI (LC)	MAX. UNBRAC LENGTH
G- H	-6 / 4	-156.6	-156.6	0.07 (1)	10.00
H- I	0 / 12	-156.6	-156.6	0.07 (1)	10.00
I- J	0 / 4	-156.6	-156.6	0.06 (1)	10.00
J- K	-4 / 4	-156.6	-156.6	0.06 (1)	10.00
K- L	-24 / 1	-156.6	-156.6	0.08 (1)	6.25
L-AC	-6 / 6	-156.6	-156.6	0.08 (1)	10.00
AC- M	-52 / 0	-156.6	-156.6	0.03 (1)	6.25
A- Z	-3 / 16	-17.5	-17.5	0.08 (1)	10.00
Z- Y	0 / 32	-17.5	-17.5	0.08 (1)	10.00
Y- X	-2 / 13	-17.5	-17.5	0.04 (1)	10.00
X- W	-3 / 4	-17.5	-17.5	0.01 (4)	10.00
W- V	-4 / 0	-17.5	-17.5	0.01 (4)	10.00
V- U	-6 / 0	-17.5	-17.5	0.01 (4)	10.00
U- T	-10 / 0	-17.5	-17.5	0.01 (4)	6.25
T- S	-10 / 0	-17.5	-17.5	0.01 (4)	6.25
S- R	-6 / 0	-17.5	-17.5	0.01 (4)	10.00
R- Q	-4 / 0	-17.5	-17.5	0.01 (4)	10.00
Q- P	-3 / 4	-17.5	-17.5	0.01 (4)	10.00
P- O	-3 / 4	-17.5	-17.5	0.01 (4)	10.00
O- N	-2 / 13	-17.5	-17.5	0.04 (1)	10.00
N-AB	0 / 32	-17.5	-17.5	0.08 (1)	10.00
AB- M	-3 / 16	-17.5	-17.5	0.08 (1)	10.00

WEBS

MEMB. FR-TO	MAX. FACTORED FORCE (LBS)	MAX CSI (LC)
R- I	-302 / 0	0.21 (1)
Q- J	-313 / 0	0.11 (1)
O- K	-291 / 0	0.06 (1)
N- L	-351 / 0	0.05 (1)
Z-AA	-114 / 3	0.00 (1)
AB-AC	-114 / 3	0.00 (1)

COMPANION LIVE LOAD FACTOR = 1.00

TRUSS PLATE MANUFACTURER IS NOT RESPONSIBLE FOR QUALITY CONTROL IN THE TRUSS MANUFACTURING PLANT .

NAIL VALUES

PLATE	GRIP(DRY) (PSI) MAX	MIN	SHEAR (PLI) MAX	MIN	SECTION (PLI) MAX	MIN
MT20	650	371	1747	788	1987	1873

PLATE PLACEMENT TOL. = 0.250 inches

PLATE ROTATION TOL. = 5.0 Deg.

JSI GRIP= 0.76 (K) (INPUT = 0.90)
JSI METAL= 0.38 (F) (INPUT = 1.00)

JOB NAME	TRUSS NAME	QUANTITY	PLY	JOB DESC. Woodcreek / Adkins	DRWG NO.
211770	H1	1	1	TRUSS DESC.	

KAMLOOPS TRUSS LTD., Kamloops, BC V2H 1G3

Version 8.420 S Mar 22 2021 MiTek Industries, Inc. Thu May 27 07:06:54 2021 Page 1

ID:X2qvwXGfFYBXzZFl6IdjmRzCaiR-HENhuBR6aZGyUv30zQBH9lrh9sjfWnobn4oMFwzCLW?

Scale = 1:73.1

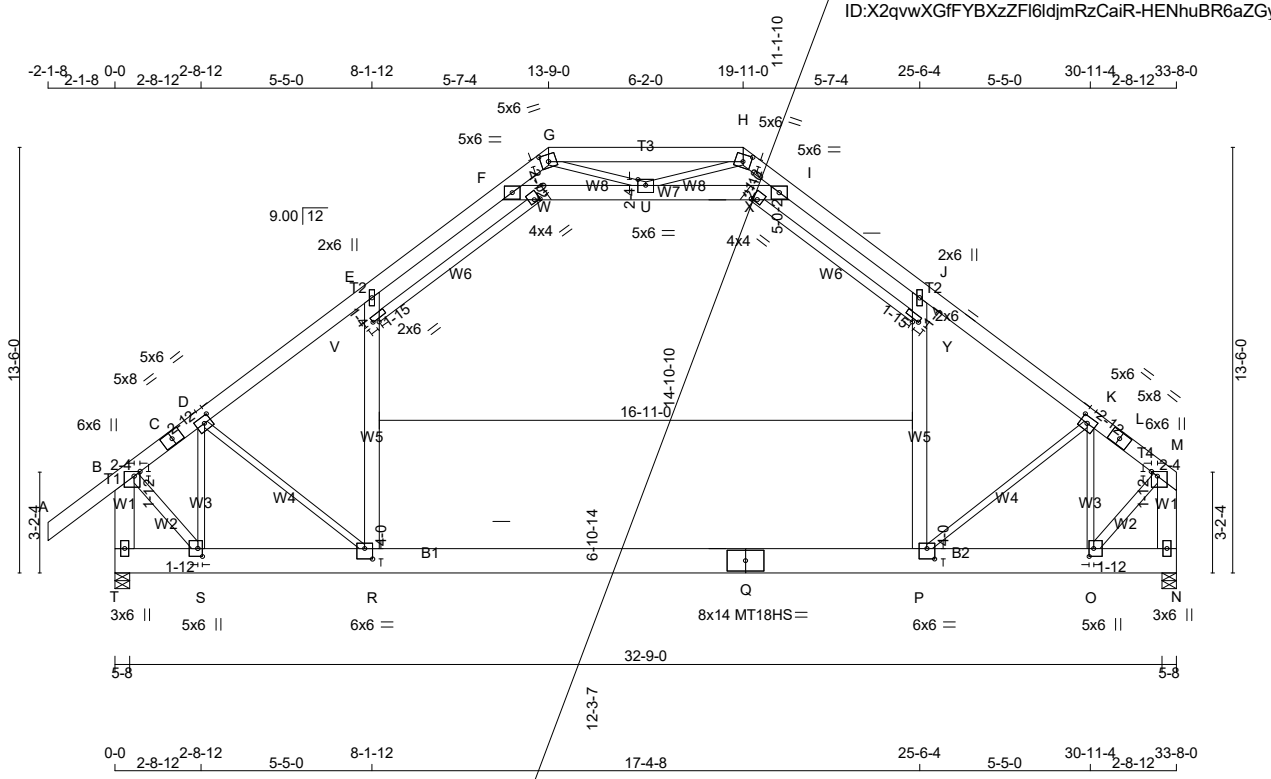

TOTAL WEIGHT = 311 lb

LUMBER

N. L. G. A. RULES

CHORDS	SIZE		LUMBER	DESCR.
A - C	2x6	DRY	1650F 1.5E	SPF
C - G	2x6	DRY	2400F 2.0E	DF
H - L	2x6	DRY	2400F 2.0E	DF
L - M	2x6	DRY	1650F 1.5E	SPF
G - H	2x6	DRY	1650F 1.5E	SPF
T - B	2x8	DRY	1950F 1.7E	DF

DIMENSIONS, SUPPORTS AND LOADINGS SPECIFIED BY FABRICATOR TO BE VERIFIED BY BUILDING DESIGNER

BEARINGS

JT	FACTORED GROSS REACTION VERT	HORZ	MAXIMUM FACTORED GROSS REACTION DOWN	HORZ	UPLIFT	INPUT BRG IN-SX	REQRD BRG IN-SX
T	3465	0	3595	327	-257	5-8	3-14
N	3167	0	3241	0	-206	5-8	3-8

PROVIDE ANCHORAGE AT BEARING JOINT T FOR 257 LBS FACTORED UPLIFT
PROVIDE ANCHORAGE AT BEARING JOINT N FOR 206 LBS FACTORED UPLIFT

PROVIDE FOR 327 LBS FACTORED HORIZONTAL REACTION AT JOINT T

UNFACTORED REACTIONS

JT	1ST LCASE COMBINED	SNOW	MAX./MIN. COMPONENT REACTIONS LIVE	PERM.LIVE	WIND	DEAD	SOIL
T	2616	1556 / 0	688 / 0	0 / 0	175 / -450	459 / 0	0 / 0
N	2414	1334 / 0	688 / 0	0 / 0	115 / -403	443 / 0	0 / 0
HORIZONTAL REACTIONS							
T	---	0 / 0	0 / 0	0 / 0	233 / -226	0 / 0	0 /0

BEARING MATERIAL TO BE SPF NO.2 OR BETTER AT JOINT(S) T, N

BRACING

MAX. UNBRACED TOP CHORD LENGTH = 5.02 FT.
MAX. UNBRACED BOTTOM CHORD LENGTH = 6.25 FT OR RIGID CEILING DIRECTLY APPLIED.

MAX. UNBRACED INTERIOR CHORD LENGTH = 4.89 FT OR RIGID SHEATHING TO ATTIC FLOOR AND CEILING.

ALL PITCH BREAKS AND PERIMETER CORNER JOINTS MUST BE LATERALLY RESTRAINED.

[M]

DESIGN CRITERIA

SPECIFIED LOADS:

TOP CH.	LL	=	57.5	PSF
	DL	=	5.0	PSF
BOT CH.	LL	=	10.0	PSF
	DL	=	7.0	PSF
TOTAL LOAD		=	79.5	PSF
ATTIC FLOOR		=	40.0	PSF
	DL	=	10.0	PSF
CEILING	DL	=	5.0	PSF

SPACING = 16.0 IN. C/C

LOADING IN FLAT SECTION BASED ON A SLOPE OF 9.00/12

THIS TRUSS IS DESIGNED FOR COMMERCIAL OR INDUSTRIAL BUILDING REQUIREMENTS OF PART 4, NBCC 2015

THIS DESIGN COMPLIES WITH:
- PART 4 OF BCBC 2018 , ABC 2019
- PART 4 OF OBC 2012 (2019 AMENDMENT)
- CSA 086-14
- TPIC 2014

DESIGN ASSUMPTIONS
- SLOPE REDUCTION FACTOR USED
-OVERHANG NOT TO BE ALTERED OR CUT OFF.

CONTINUED ON PAGE 2

JOB NAME	TRUSS NAME	QUANTITY	PLY	JOB DESC. Woodcreek / Adkins	DRWG NO.
211770	H1	1	1	TRUSS DESC.	

KAMLOOPS TRUSS LTD., Kamloops, BC V2H 1G3

Version 8.420 S Mar 22 2021 MiTek Industries, Inc. Thu May 27 07:06:54 2021 Page 2

ID:X2qvwXGfFYBXzZFl6IdjmRzCaiR-HENhuBR6aZGyUv30zQBH9lrh9sjfWnobn4oMFwzCLW?

[illegible]
[illegible]
[illegible]

JOB NAME	TRUSS NAME	QUANTITY	PLY	JOB DESC. Woodcreek / Adkins	DRWG NO.
211770	H2	6	1	TRUSS DESC.	

KAMLOOPS TRUSS LTD., Kamloops, BC V2H 1G3

Version 8.420 S Mar 22 2021 MiTek Industries, Inc. Thu May 27 07:06:57 2021 Page 1

ID:X2qvwXGfFYBXzZFl6ldjmRzCaiR-ip2pXDT_tUeXLMnafYk_nOTCU4lYj8q1T110rFzCLVy

Scale = 1:73.1

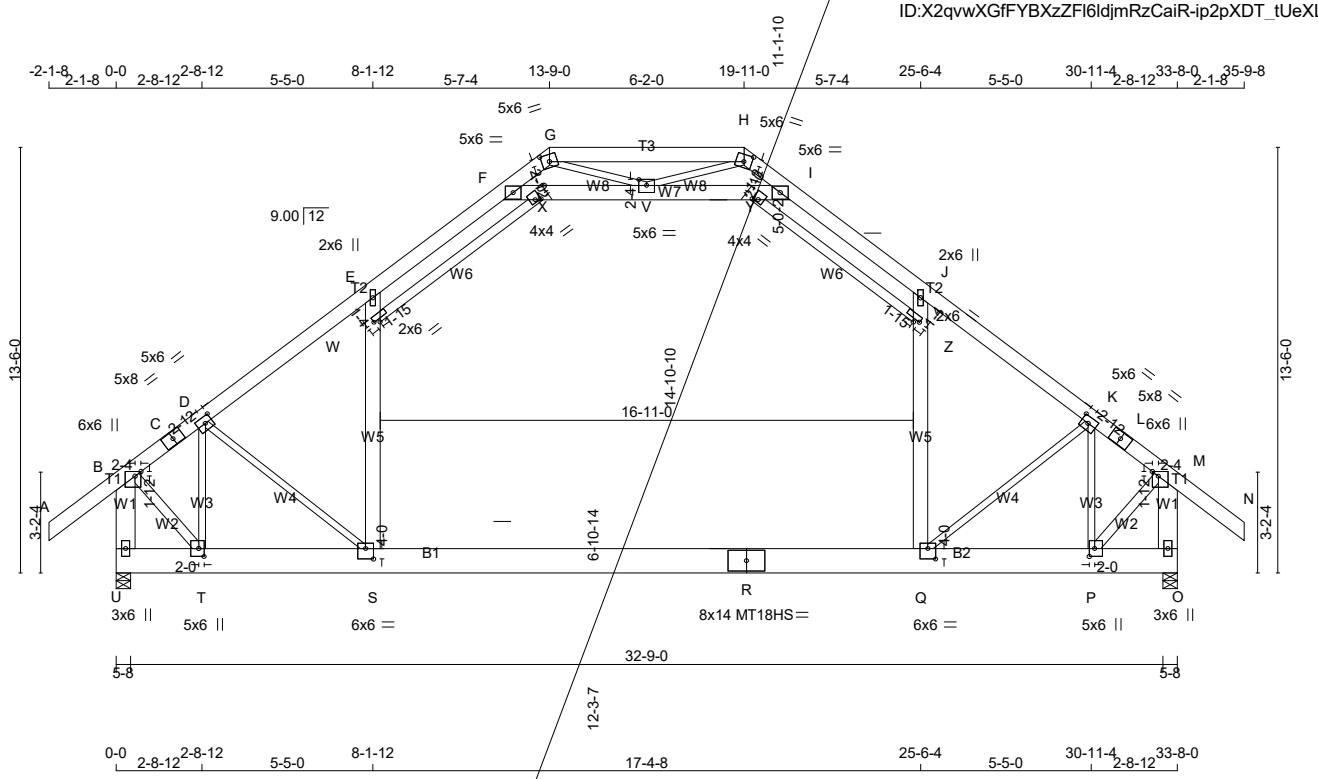

TOTAL WEIGHT = 6 X 316 = 1897 lb [M]

LUMBER

N. L. G. A. RULES

CHORDS	SIZE		LUMBER	DESCR.
A - C	2x6	DRY	1650F 1.5E	SPF
C - G	2x6	DRY	2400F 2.0E	DF
H - L	2x6	DRY	2400F 2.0E	DF
L - N	2x6	DRY	1650F 1.5E	SPF
G - H	2x6	DRY	1650F 1.5E	SPF
U - B	2x8	DRY	1950F 1.7E	DF

DIMENSIONS, SUPPORTS AND LOADINGS SPECIFIED BY FABRICATOR TO BE VERIFIED BY BUILDING DESIGNER

BEARINGS

	FACTORED GROSS REACTION		MAXIMUM FACTORED GROSS REACTION			INPUT BRG	REQRD BRG
JT	VERT	HORZ	DOWN	HORZ	UPLIFT	IN-SX	IN-SX
U	3455	0	3594	-341	-258	5-8	3-14
O	3455	0	3594	0	-258	5-8	3-14

PROVIDE ANCHORAGE AT BEARING JOINT U FOR 258 LBS FACTORED UPLIFT
PROVIDE ANCHORAGE AT BEARING JOINT O FOR 258 LBS FACTORED UPLIFT

PROVIDE FOR 341 LBS FACTORED HORIZONTAL REACTION AT JOINT U

UNFACTORED REACTIONS

	1ST LCASE	MAX./MIN. COMPONENT REACTIONS					
JT	COMBINED	SNOW	LIVE	PERM.LIVE	WIND	DEAD	SOIL
U	2609	1556 / 0	688 / 0	0 / 0	175 / -450	458 / 0	0 / 0
O	2609	1556 / 0	688 / 0	0 / 0	126 / -450	458 / 0	0 / 0
HORIZONTAL REACTIONS							
U	---	0 / 0	0 / 0	0 / 0	242 / -243	0 / 0	0 /0

BEARING MATERIAL TO BE SPF NO.2 OR BETTER AT JOINT(S) U, O

BRACING

MAX. UNBRACED TOP CHORD LENGTH = 5.04 FT.
MAX. UNBRACED BOTTOM CHORD LENGTH = 6.25 FT OR RIGID CEILING DIRECTLY APPLIED.

MAX. UNBRACED INTERIOR CHORD LENGTH = 4.91 FT OR RIGID SHEATHING TO ATTIC FLOOR AND CEILING.

ALL PITCH BREAKS AND PERIMETER CORNER JOINTS MUST BE LATERALLY RESTRAINED.

DESIGN CRITERIA

SPECIFIED LOADS:

TOP CH.	LL	=	57.5	PSF
	DL	=	5.0	PSF
BOT CH.	LL	=	10.0	PSF
	DL	=	7.0	PSF
TOTAL LOAD		=	79.5	PSF
ATTIC FLOOR		=	40.0	PSF
	DL	=	10.0	PSF
CEILING	DL	=	5.0	PSF

SPACING = 16.0 IN. C/C

LOADING IN FLAT SECTION BASED ON A SLOPE OF 9.00/12

THIS TRUSS IS DESIGNED FOR COMMERCIAL OR INDUSTRIAL BUILDING REQUIREMENTS OF PART 4, NBCC 2015

THIS DESIGN COMPLIES WITH:
- PART 4 OF BCBC 2018 , ABC 2019
- PART 4 OF OBC 2012 (2019 AMENDMENT)
- CSA 086-14
- TPIC 2014

DESIGN ASSUMPTIONS
- SLOPE REDUCTION FACTOR USED
-OVERHANG NOT TO BE ALTERED OR CUT OFF.

CONTINUED ON PAGE 2

JOB NAME	TRUSS NAME	QUANTITY	PLY	JOB DESC. Woodcreek / Adkins	DRWG NO.
211770	H2	6	1	TRUSS DESC.	

KAMLOOPS TRUSS LTD., Kamloops, BC V2H 1G3

Version 8.420 S Mar 22 2021 MiTek Industries, Inc. Thu May 27 07:06:57 2021 Page 2

ID:X2qvwXGfFYBXzZFl6ldjmRzCaiR-ip2pXDT_tUeXLMnafYk_nOTCU4lYj8q1T110rFzCLVy

[illegible]
[illegible]
[illegible]

JOB NAME	TRUSS NAME	QUANTITY	PLY	JOB DESC. Woodcreek / Adkins	DRWG NO.
211770	H3	11	1	TRUSS DESC.	

KAMLOOPS TRUSS LTD., Kamloops, BC V2H 1G3

Version 8.420 S Mar 22 2021 MiTek Industries, Inc. Thu May 27 07:07:00 2021 Page 1

ID:X2qvwXGfFYBXzZFl6ldjmRzCaiR-6Oky9EWtAP06CqW9KhHhO05ieHm3wVHT9?FgSazCLVv

Scale = 1:73.1

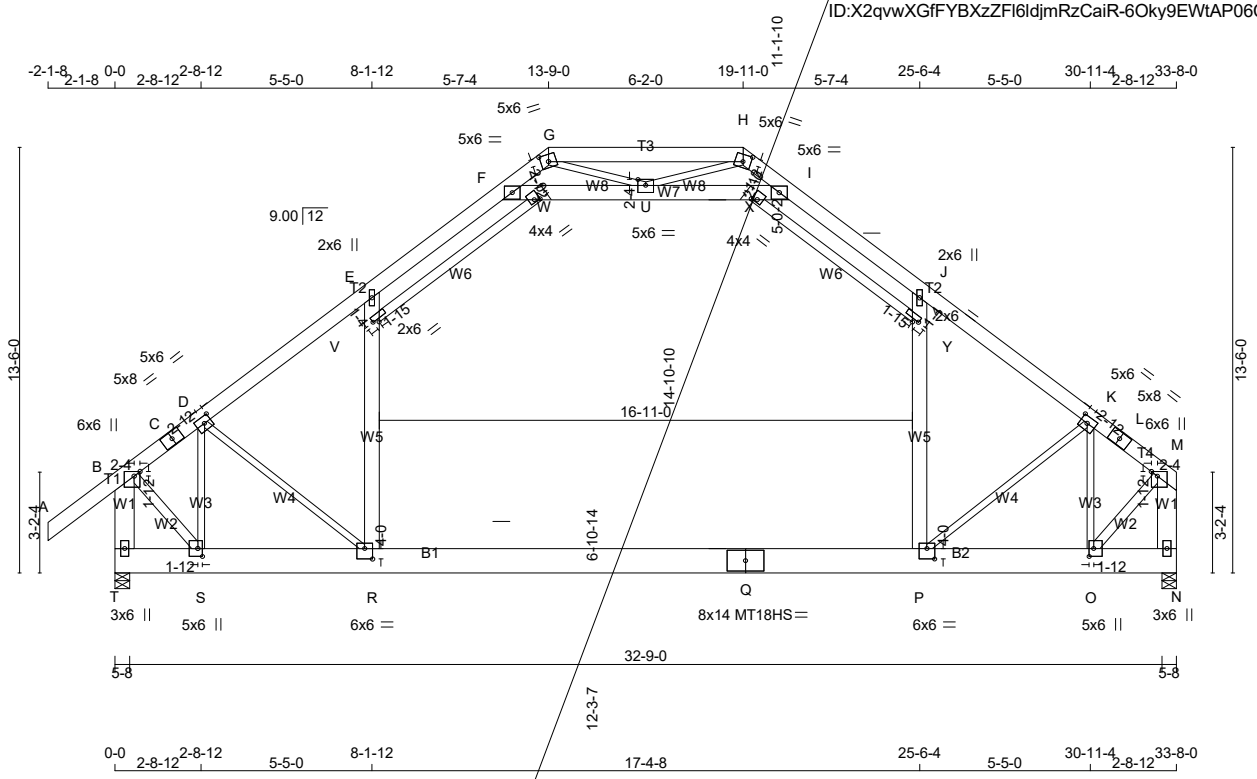

TOTAL WEIGHT = 11 X 311 = 3426 lb

[M]

LUMBER

N. L. G. A. RULES

CHORDS	SIZE		LUMBER	DESCR.
A - C	2x6	DRY	1650F 1.5E	SPF
C - G	2x6	DRY	2400F 2.0E	DF
H - L	2x6	DRY	2400F 2.0E	DF
L - M	2x6	DRY	1650F 1.5E	SPF
G - H	2x6	DRY	1650F 1.5E	SPF
T - B	2x8	DRY	1950F 1.7E	DF

DIMENSIONS, SUPPORTS AND LOADINGS SPECIFIED BY FABRICATOR TO BE VERIFIED BY BUILDING DESIGNER

BEARINGS

JT	FACTORED GROSS REACTION VERT	HORZ	MAXIMUM FACTORED GROSS REACTION DOWN	HORZ	UPLIFT	INPUT BRG IN-SX	REQRD BRG IN-SX
T	3465	0	3595	327	-257	5-8	3-14
N	3167	0	3241	0	-206	5-8	3-8

PROVIDE ANCHORAGE AT BEARING JOINT T FOR 257 LBS FACTORED UPLIFT
PROVIDE ANCHORAGE AT BEARING JOINT N FOR 206 LBS FACTORED UPLIFT

PROVIDE FOR 327 LBS FACTORED HORIZONTAL REACTION AT JOINT T

UNFACTORED REACTIONS

JT	1ST LCASE COMBINED	MAX./MIN. COMPONENT REACTIONS SNOW	LIVE	PERM.LIVE	WIND	DEAD	SOIL
T	2616	1556 / 0	688 / 0	0 / 0	175 / -450	459 / 0	0 / 0
N	2414	1334 / 0	688 / 0	0 / 0	115 / -403	443 / 0	0 / 0
HORIZONTAL REACTIONS							
T	---	0 / 0	0 / 0	0 / 0	233 / -226	0 / 0	0 /0

BEARING MATERIAL TO BE SPF NO.2 OR BETTER AT JOINT(S) T, N

BRACING

MAX. UNBRACED TOP CHORD LENGTH = 5.02 FT.
MAX. UNBRACED BOTTOM CHORD LENGTH = 6.25 FT OR RIGID CEILING DIRECTLY APPLIED.

MAX. UNBRACED INTERIOR CHORD LENGTH = 4.89 FT OR RIGID SHEATHING TO ATTIC FLOOR AND CEILING.

ALL PITCH BREAKS AND PERIMETER CORNER JOINTS MUST BE LATERALLY RESTRAINED.

DESIGN CRITERIA

SPECIFIED LOADS:

TOP CH.	LL	=	57.5	PSF
	DL	=	5.0	PSF
BOT CH.	LL	=	10.0	PSF
	DL	=	7.0	PSF
TOTAL LOAD		=	79.5	PSF
ATTIC FLOOR		=	40.0	PSF
	DL	=	10.0	PSF
CEILING	DL	=	5.0	PSF

SPACING = 16.0 IN. C/C

LOADING IN FLAT SECTION BASED ON A SLOPE OF 9.00/12

THIS TRUSS IS DESIGNED FOR COMMERCIAL OR INDUSTRIAL BUILDING REQUIREMENTS OF PART 4, NBCC 2015

THIS DESIGN COMPLIES WITH:
- PART 4 OF BCBC 2018 , ABC 2019
- PART 4 OF OBC 2012 (2019 AMENDMENT)
- CSA 086-14
- TPIC 2014

DESIGN ASSUMPTIONS
- SLOPE REDUCTION FACTOR USED
-OVERHANG NOT TO BE ALTERED OR CUT OFF.

CONTINUED ON PAGE 2

JOB NAME	TRUSS NAME	QUANTITY	PLY	JOB DESC. Woodcreek / Adkins	DRWG NO.
211770	H3	11	1	TRUSS DESC.	

KAMLOOPS TRUSS LTD., Kamloops, BC V2H 1G3

ID:X2qvwXGfFYBXzZFl6ldjmRzCaiR-6Oky9EWtAP06CqW9KhHhO05ieHm3wVHT9?FgSazCLVv

[illegible]
[illegible]
[illegible]

JOB NAME	TRUSS NAME	QUANTITY	PLY	JOB DESC. Woodcreek / Adkins	DRWG NO.
211770	J1	3	1	TRUSS DESC.	

KAMLOOPS TRUSS LTD., Kamloops, BC V2H 1G3

ID:X2qvwXGfFYBXzZFI6ldjmRzCaiR-2nsiawX7h0GqS8gYR6K9URABx5c8OWrmdJknWSzCLVt

Scale: 1/4"=1'

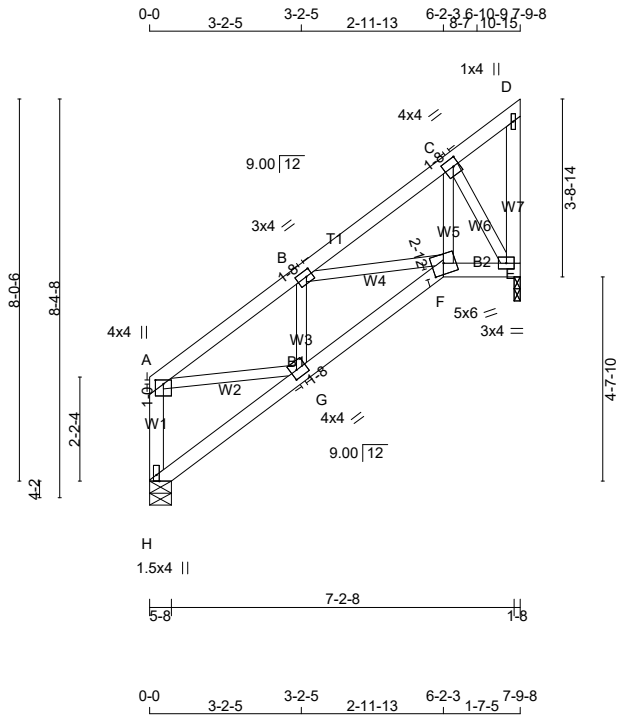

TOTAL WEIGHT = 3 X 38 = 113 lb

[M][F]

LUMBER

N. L. G. A. RULES

CHORDS	SIZE		LUMBER	DESCR.
H - A	2x4	DRY	1650F 1.5E	SPF
A - D	2x4	DRY	1650F 1.5E	SPF
H - F	2x4	DRY	1650F 1.5E	SPF
F - E	2x4	DRY	1650F 1.5E	SPF
ALL WEBS	2x3	DRY	No.2	SPF

DIMENSIONS, SUPPORTS AND LOADINGS SPECIFIED BY FABRICATOR TO BE VERIFIED BY BUILDING DESIGNER

BEARINGS

JT	FACTORED GROSS REACTION VERT	HORZ	MAXIMUM GROSS REACTION DOWN	FACTORED HORZ	UPLIFT	INPUT BRG IN-SX	REQRD BRG IN-SX
H	666	0	666	0	0	5-8	1-8
E	652	0	652	0	0	1-8	1-8

UNFACTORED REACTIONS

JT	1ST LCASE COMBINED	MAX./MIN. COMPONENT REACTIONS SNOW	LIVE	PERM.LIVE	WIND	DEAD	SOIL
H	459	367 / 0	0 / 0	0 / 0	0 / 0	92 / 0	0 / 0
E	450	359 / 0	0 / 0	0 / 0	0 / 0	91 / 0	0 / 0

BEARING MATERIAL TO BE SPF NO.2 OR BETTER AT JOINT(S) H

BRACING

TOP CHORD TO BE SHEATHED OR MAX. PURLIN SPACING = 6.25 FT.
MAX. UNBRACED BOTTOM CHORD LENGTH = 10.00 FT OR RIGID CEILING DIRECTLY APPLIED.

ALL PITCH BREAKS AND PERIMETER CORNER JOINTS MUST BE LATERALLY RESTRAINED.

DESIGN CRITERIA

SPECIFIED LOADS:

TOP CH.	LL	=	48.1	PSF
	DL	=	5.0	PSF
BOT CH.	LL	=	0.0	PSF
	DL	=	7.0	PSF
TOTAL LOAD		=	60.0	PSF

SPACING = 24.0 IN. C/C

THIS TRUSS IS DESIGNED FOR RESIDENTIAL OR SMALL BUILDING REQUIREMENTS OF PART 9, NBCC 2015

THIS DESIGN COMPLIES WITH:
- PART 9 OF BCBC 2018 , ABC 2019
- PART 9 OF OBC 2012 (2019 AMENDMENT)
- CSA 086-14
- TPIC 2014

(55 % OF 83.6 P.S.F. G.S.L. PLUS 2.1 P.S.F. RAIN LOAD) EQUALS 48.1 P.S.F. SPECIFIED ROOF LIVE LOAD

ALLOWABLE DEFL.(LL)= L/180 (0.51")
CALCULATED VERT. DEFL.(LL) = L/ 999 (0.01")
ALLOWABLE DEFL.(TL)= L/180 (0.51")
CALCULATED VERT. DEFL.(TL) = L/ 999 (0.02")

CSI: TC=0.14/1.00 (A-B:1) , BC=0.11/1.00 (F-G:1) , WB=0.15/1.00 (A-G:1) , SSI=0.19/1.00 (A-B:1)

CONTINUED ON PAGE 2

JOB NAME	TRUSS NAME	QUANTITY	PLY	JOB DESC. Woodcreek / Adkins	DRWG NO.
211770	J1	3	1	TRUSS DESC.	

KAMLOOPS TRUSS LTD., Kamloops, BC V2H 1G3

Version 8.420 S Mar 22 2021 MiTek Industries, Inc. Thu May 27 07:07:02 2021 Page 2

ID:X2qvwXGfFYBXzZFI6ldjmRzCaiR-2nsiawX7h0GqS8gYR6K9URABx5c8OWrmdJknWSzCLVt

DRY: SEASONED LUMBER.

PLATES (table is in inches)

JT	TYPE	PLATES	W	LEN	Y	X
A	TMVW+p	MT20	4.0	4.0	1.00	2.00
B	TMWW-t	MT20	3.0	4.0	1.50	1.50
C	TMWW-t	MT20	4.0	4.0	2.00	1.50
D	TMW+w	MT20	1.0	4.0		
E	BMWW1-t	MT20	3.0	4.0		
F	BBWW-m	MT20	5.0	6.0	2.75	3.00
G	BMWW-t	MT20	4.0	4.0	2.00	1.50
H	BMV1+p	MT20	1.5	4.0	Edge	

Edge - INDICATES REFERENCE CORNER OF PLATE TOUCHES EDGE OF CHORD.

LOADING

TOTAL LOAD CASES: (4)

C H O R D S

MEMB. FR-TO	MAX. FACTORED FORCE (LBS)	FACTORED VERT. LOAD LC1 (PLF) FROM	TO	MAX CSI (LC)	MAX. UNBRAC LENGTH
H- A	-640 / 0	0.0	0.0	0.06 (1)	7.81
A- B	-780 / 0	-156.6	-156.6	0.14 (1)	6.25
B- C	-497 / 0	-156.6	-156.6	0.14 (1)	6.25
C- D	-36 / 0	-156.6	-156.6	0.07 (1)	6.25
H- G	0 / 4	-17.5	-17.5	0.04 (4)	10.00
G- F	0 / 806	-17.5	-17.5	0.11 (1)	10.00
F- E	0 / 361	-17.5	-17.5	0.05 (1)	10.00

W E B S

MEMB. FR-TO	MAX. FACTORED FORCE (LBS)	MAX CSI (LC)
A- G	0 / 649	0.15 (1)
G- B	-377 / 0	0.06 (1)
B- F	-263 / 0	0.05 (1)
F- C	0 / 519	0.12 (1)
E- D	-41 / 0	0.00 (1)
C- E	-702 / 0	0.12 (1)

DOL LUMBER=1.00 NAIL=1.00 LS BEND=1.10 COMP=1.10 SHEAR=1.10 TENS= 1.10

COMPANION LIVE LOAD FACTOR = 1.00

TRUSS PLATE MANUFACTURER IS NOT RESPONSIBLE FOR QUALITY CONTROL IN THE TRUSS MANUFACTURING PLANT .

NAIL VALUES

PLATE	GRIP(DRY) (PSI) MAX	MIN	SHEAR (PLI) MAX	MIN	SECTION (PLI) MAX	MIN
MT20	650	371	1747	788	1987	1873

PLATE PLACEMENT TOL. = 0.250 inches

PLATE ROTATION TOL. = 5.0 Deg.

JSI GRIP= 0.88 (A) (INPUT = 0.90)
JSI METAL= 0.43 (H) (INPUT = 1.00)

JOB NAME	TRUSS NAME	QUANTITY	PLY	JOB DESC. Woodcreek / Adkins	DRWG NO.
211770	J2	1	1	TRUSS DESC.	

KAMLOOPS TRUSS LTD., Kamloops, BC V2H 1G3

Version 8.420 S Mar 22 2021 MiTek Industries, Inc. Thu May 27 07:07:04 2021 Page 1

ID:X2qvwXGfFYBXzZFl6ldjmRzCaiR-_9zT?cZNDdXYhRpxZXMdZsGVduIjsSc34dDubLzCLVr

Scale = 1:27.6

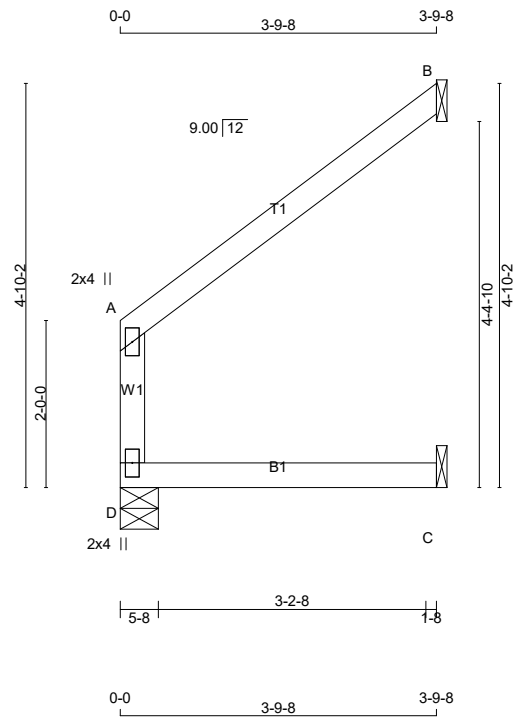

TOTAL WEIGHT = 12 lb

LUMBER

N. L. G. A. RULES

CHORDS	SIZE		LUMBER	DESCR.
D - A	2x4	DRY	1650F 1.5E	SPF
A - B	2x4	DRY	1650F 1.5E	SPF
D - C	2x4	DRY	1650F 1.5E	SPF

DRY: SEASONED LUMBER.

DIMENSIONS, SUPPORTS AND LOADINGS SPECIFIED BY FABRICATOR TO BE VERIFIED BY BUILDING DESIGNER

BEARINGS

	FACTORED GROSS REACTION		MAXIMUM FACTORED GROSS REACTION			INPUT BRG	REQRD BRG
JT	VERT	HORZ	DOWN	HORZ	UPLIFT	IN-SX	IN-SX
D	330	0	330	0	0	5-8	1-8
B	273	0	273	0	0	1-8	1-8
C	57	0	57	0	0	1-8	1-8

SEE MITEK STANDARD DETAIL MSD2015-H FOR CONNECTION TO JOINT(S) B , C

UNFACTORED REACTIONS

	1ST LCASE	MAX./MIN. COMPONENT REACTIONS					
JT	COMBINED	SNOW	LIVE	PERM.LIVE	WIND	DEAD	SOIL
D	228	182 / 0	0 / 0	0 / 0	0 / 0	46 / 0	0 / 0
B	185	166 / 0	0 / 0	0 / 0	0 / 0	19 / 0	0 / 0
C	42	16 / 0	0 / 0	0 / 0	0 / 0	26 / 0	0 / 0

BEARING MATERIAL TO BE SPF NO.2 OR BETTER AT JOINT(S) D

BRACING

TOP CHORD TO BE SHEATHED OR MAX. PURLIN SPACING = 6.25 FT.
MAX. UNBRACED BOTTOM CHORD LENGTH = 10.00 FT OR RIGID CEILING DIRECTLY APPLIED.

ALL PITCH BREAKS AND PERIMETER CORNER JOINTS MUST BE LATERALLY RESTRAINED.

[M][F]

DESIGN CRITERIA

SPECIFIED LOADS:

TOP CH.	LL	=	48.1	PSF
	DL	=	5.0	PSF
BOT CH.	LL	=	0.0	PSF
	DL	=	7.0	PSF
TOTAL LOAD		=	60.0	PSF

SPACING = 24.0 IN. C/C

THIS TRUSS IS DESIGNED FOR RESIDENTIAL OR SMALL BUILDING REQUIREMENTS OF PART 9, NBCC 2015

THIS DESIGN COMPLIES WITH:
- PART 9 OF BCBC 2018 , ABC 2019
- PART 9 OF OBC 2012 (2019 AMENDMENT)
- CSA 086-14
- TPIC 2014

(55 % OF 83.6 P.S.F. G.S.L. PLUS 2.1 P.S.F. RAIN LOAD) EQUALS 48.1 P.S.F. SPECIFIED ROOF LIVE LOAD

ALLOWABLE DEFL.(LL)= L/180 (0.25")
CALCULATED VERT. DEFL.(LL) = L/ 999 (0.01")
ALLOWABLE DEFL.(TL)= L/180 (0.25")
CALCULATED VERT. DEFL.(TL) = L/ 999 (0.02")

CSI: TC=0.26/1.00 (A-B:1) , BC=0.11/1.00 (C-D:1) , WB=0.00/1.00 (n/a:0) , SSI=0.20/1.00 (A-B:1)

CONTINUED ON PAGE 2

JOB NAME	TRUSS NAME	QUANTITY	PLY	JOB DESC. Woodcreek / Adkins	DRWG NO.
211770	J2	1	1	TRUSS DESC.	

KAMLOOPS TRUSS LTD., Kamloops, BC V2H 1G3

ID:X2qvwXGfFYBXzZFl6ldjmRzCaiR-_9zT?cZNDdXYhRpxZXMdZsGVduljsSc34dDubLzCLVr

PLATES (table is in inches)

JT	TYPE	PLATES	W	LEN	Y	X
A	TMV+p	MT20	2.0	4.0		
D	BMV1+p	MT20	2.0	4.0		

LOADING

TOTAL LOAD CASES: (4)

C H O R D S

MEMB. FR-TO	MAX. FACTORED FORCE (LBS)	FACTORED VERT. LOAD LC1 (PLF) FROM	TO	MAX CSI (LC)
D- A	-321 / 0	0.0	0.0	0.10 (1)
A- B	-14 / 0	-156.6	-156.6	0.26 (1)
D- C	0 / 0	-17.5	-17.5	0.11 (1)

W E B S

MAX. UNBRAC LENGTH	MEMB. FR-TO	MAX. FACTORED FORCE (LBS)	MAX CSI (LC)
7.81			
6.25			
10.00			

DOL LUMBER=1.00 NAIL=1.00 LS BEND=1.10 COMP=1.10 SHEAR=1.10
TENS= 1.10

COMPANION LIVE LOAD FACTOR = 1.00

TRUSS PLATE MANUFACTURER IS NOT RESPONSIBLE FOR QUALITY CONTROL IN THE TRUSS MANUFACTURING PLANT .

NAIL VALUES

PLATE	GRIP(DRY) (PSI) MAX	MIN	SHEAR (PLI) MAX	MIN	SECTION (PLI) MAX	MIN
MT20	650	371	1747	788	1987	1873

PLATE PLACEMENT TOL. = 0.250 inches

PLATE ROTATION TOL. = 5.0 Deg.

JSI GRIP= 0.21 (A) (INPUT = 0.90)
JSI METAL= 0.17 (A) (INPUT = 1.00)

JOB NAME	TRUSS NAME	QUANTITY	PLY	JOB DESC. Woodcreek / Adkins	DRWG NO.
211770	J3	1	1	TRUSS DESC.	

KAMLOOPS TRUSS LTD., Kamloops, BC V2H 1G3

ID:X2qvwXGfFYBXzZFI6ldjmRzCaiR-TLXrCya?_xfPJbO77Ets54oftIesbvsCJHzR7nzCLVq

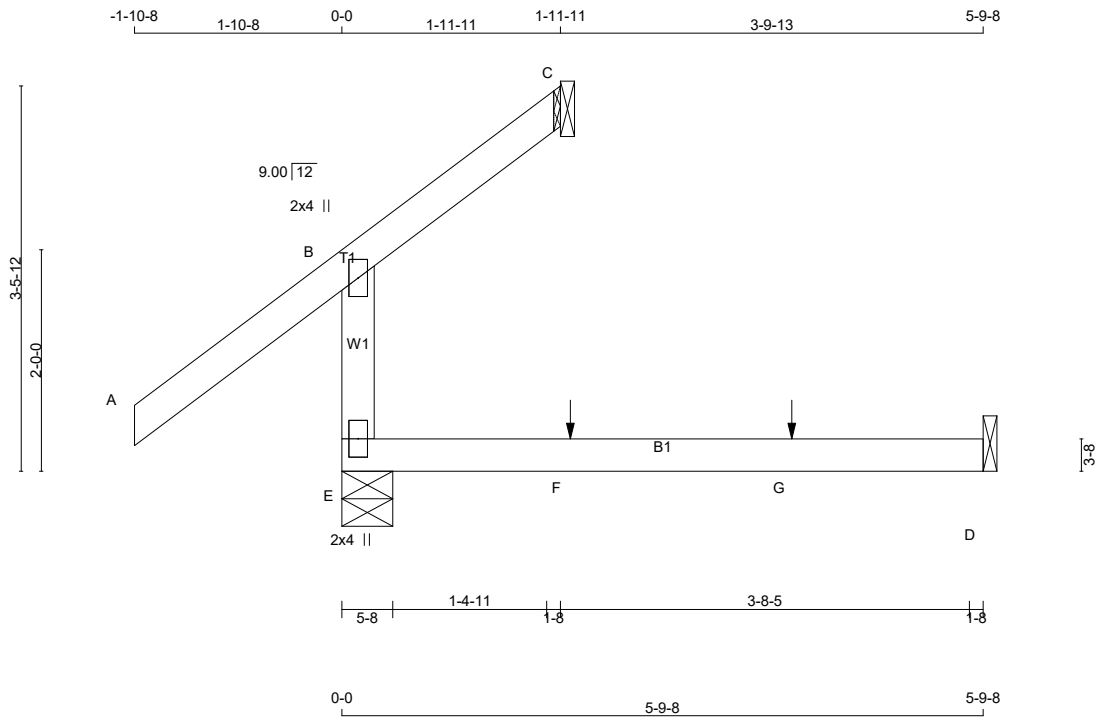

TOTAL WEIGHT = 14 lb

LUMBER
N. L. G. A. RULES

CHORDS	SIZE		LUMBER	DESCR.
E - B	2x4	DRY	1650F 1.5E	SPF
A - C	2x4	DRY	1650F 1.5E	SPF
E - D	2x4	DRY	1650F 1.5E	SPF

DRY: SEASONED LUMBER.

DIMENSIONS, SUPPORTS AND LOADINGS SPECIFIED BY FABRICATOR TO BE VERIFIED BY BUILDING DESIGNER

BEARINGS

	FACTORED GROSS REACTION		MAXIMUM FACTORED GROSS REACTION			INPUT BRG	REQRD BRG
JT	VERT	HORZ	DOWN	HORZ	UPLIFT	IN-SX	IN-SX
E	641	0	641	0	0	5-8	1-8
C	40	0	40	0	0	1-8	1-8
D	38	0	50	0	0	1-8	1-8

SEE MITEK STANDARD DETAIL MSD2015-H FOR CONNECTION TO JOINT(S) C , D

UNFACTORED REACTIONS

	1ST LCASE	MAX./MIN. COMPONENT REACTIONS					
JT	COMBINED	SNOW	LIVE	PERM.LIVE	WIND	DEAD	SOIL
E	439	368 / 0	0 / 0	0 / 0	0 / 0	70 / 0	0 / 0
C	29	14 / 0	0 / 0	0 / 0	0 / 0	14 / 0	0 / 0
D	31	0 / -11	0 / 0	0 / 0	0 / 0	36 / 0	0 / 0

BEARING MATERIAL TO BE SPF NO.2 OR BETTER AT JOINT(S) E, C

BRACING
TOP CHORD TO BE SHEATHED OR MAX. PURLIN SPACING = 6.25 FT.
MAX. UNBRACED BOTTOM CHORD LENGTH = 10.00 FT OR RIGID CEILING DIRECTLY APPLIED.

ALL PITCH BREAKS AND PERIMETER CORNER JOINTS MUST BE LATERALLY RESTRAINED.

[M]

DESIGN CRITERIA

SPECIFIED LOADS:

TOP CH.	LL	=	48.1	PSF
	DL	=	5.0	PSF
BOT CH.	LL	=	0.0	PSF
	DL	=	7.0	PSF
TOTAL LOAD		=	60.0	PSF

SPACING = 24.0 IN. C/C

THIS TRUSS IS DESIGNED FOR RESIDENTIAL OR SMALL BUILDING REQUIREMENTS OF PART 9, NBCC 2015

THIS DESIGN COMPLIES WITH:
- PART 9 OF BCBC 2018 , ABC 2019
- PART 9 OF OBC 2012 (2019 AMENDMENT)
- CSA 086-14
- TPIC 2014

DESIGN ASSUMPTIONS
-OVERHANG NOT TO BE ALTERED OR CUT OFF.

(55 % OF 83.6 P.S.F. G.S.L. PLUS 2.1 P.S.F. RAIN LOAD) EQUALS 48.1 P.S.F. SPECIFIED ROOF LIVE LOAD

ALLOWABLE DEFL.(LL)= L/180 (0.39")
CALCULATED VERT. DEFL.(LL) = L/ 999 (0.03")
ALLOWABLE DEFL.(TL)= L/180 (0.39")
CALCULATED VERT. DEFL.(TL) = L/ 999 (0.03")

CONTINUED ON PAGE 2

PLATES (table is in inches)

JT	TYPE	PLATES	W	LEN	Y	X
B	TMV+p	MT20	2.0	4.0		
E	BMV1+p	MT20	2.0	4.0		

LOADING

TOTAL LOAD CASES: (7)

CHORDS

MEMB. FR-TO	MAX. FACTORED FORCE (LBS)	FACTORED VERT. LOAD (PLF) FROM	TO	MAX CSI (LC)	MAX. UNBRAC LENGTH
E- B	-586 / 0	0.0	0.0	0.09 (1)	7.81
A- B	0 / 92	-156.6	-156.6	0.36 (1)	10.00
B- C	-74 / 4	-156.6	-156.6	0.28 (5)	6.25
E- F	0 / 0	-17.5	-17.5	0.11 (4)	10.00
F- G	0 / 0	-17.5	-17.5	0.11 (4)	10.00
G- D	0 / 0	-17.5	-17.5	0.11 (4)	10.00

WEBS

MEMB. FR-TO	MAX. FACTORED FORCE (LBS)	MAX CSI (LC)

FACTORED CONCENTRATED LOADS (LBS)

JT	LOC.	LC1	MAX-	MAX+	FACE	DIR.	TYPE	HEEL	CONN.
F	2-0-12	1	1	37	BACK	VERT	TOTAL	---	C1
G	4-0-12	1	1	---	BACK	VERT	TOTAL	---	C1

CONNECTION REQUIREMENTS

1) **C1:** A SUITABLE HANGER/MECHANICAL CONNECTION IS REQUIRED.

CSI: TC=0.36/1.00 (A-B:1) , BC=0.11/1.00 (D-E:4) , WB=0.00/1.00 (n/a:0) , SSI=0.19/1.00 (A-B:1)

DOL LUMBER=1.00 NAIL=1.00 LS BEND=1.10 COMP=1.10 SHEAR=1.10 TENS= 1.10

COMPANION LIVE LOAD FACTOR = 1.00

AUTOSOLVE RIGHT HEEL ONLY

TRUSS PLATE MANUFACTURER IS NOT RESPONSIBLE FOR QUALITY CONTROL IN THE TRUSS MANUFACTURING PLANT .

NAIL VALUES

PLATE	GRIP(DRY) (PSI) MAX	MIN	SHEAR (PLI) MAX	MIN	SECTION (PLI) MAX	MIN
MT20	650	371	1747	788	1987	1873

PLATE PLACEMENT TOL. = 0.250 inches

PLATE ROTATION TOL. = 5.0 Deg.

JSI GRIP= 0.38 (B) (INPUT = 0.90)
JSI METAL= 0.31 (B) (INPUT = 1.00)

JOB NAME	TRUSS NAME	QUANTITY	PLY	JOB DESC. Woodcreek / Adkins	DRWG NO.
211770	J4	1	1	TRUSS DESC.	

KAMLOOPS TRUSS LTD., Kamloops, BC V2H 1G3

ID:X2qvwXGfFYBXzZFl6ldjmRzCaiR-PkfbddbGWYv6YvYVEfwLBVu?M6JN3oMVmbSYBgzCLVo

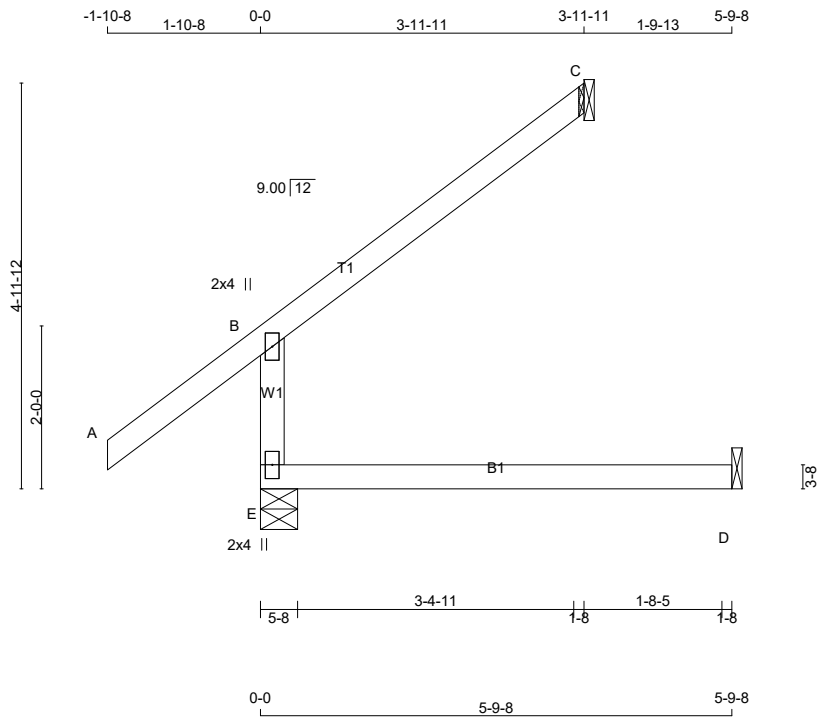

TOTAL WEIGHT = 17 lb

LUMBER

N. L. G. A. RULES

CHORDS	SIZE		LUMBER	DESCR.
E - B	2x4	DRY	1650F 1.5E	SPF
A - C	2x4	DRY	1650F 1.5E	SPF
E - D	2x4	DRY	1650F 1.5E	SPF

DRY: SEASONED LUMBER.

DIMENSIONS, SUPPORTS AND LOADINGS SPECIFIED BY FABRICATOR TO BE VERIFIED BY BUILDING DESIGNER

BEARINGS

	FACTORED GROSS REACTION		MAXIMUM FACTORED GROSS REACTION			INPUT BRG	REQRD BRG
JT	VERT	HORZ	DOWN	HORZ	UPLIFT	IN-SX	IN-SX
E	754	0	754	0	0	5-8	1-8
C	234	0	234	0	0	1-8	1-8
D	44	0	49	0	0	1-8	1-8

SEE MITEK STANDARD DETAIL MSD2015-H FOR CONNECTION TO JOINT(S) C , D

UNFACTORED REACTIONS

	1ST LCASE	MAX./MIN. COMPONENT REACTIONS					
JT	COMBINED	SNOW	LIVE	PERM.LIVE	WIND	DEAD	SOIL
E	517	427 / 0	0 / 0	0 / 0	0 / 0	90 / 0	0 / 0
C	158	143 / 0	0 / 0	0 / 0	0 / 0	15 / 0	0 / 0
D	35	0 / 0	0 / 0	0 / 0	0 / 0	35 / 0	0 / 0

BEARING MATERIAL TO BE SPF NO.2 OR BETTER AT JOINT(S) E, C

BRACING

TOP CHORD TO BE SHEATHED OR MAX. PURLIN SPACING = 6.25 FT.
MAX. UNBRACED BOTTOM CHORD LENGTH = 10.00 FT OR RIGID CEILING DIRECTLY APPLIED.

ALL PITCH BREAKS AND PERIMETER CORNER JOINTS MUST BE LATERALLY RESTRAINED.

[M]

DESIGN CRITERIA

SPECIFIED LOADS:

TOP CH.	LL	=	48.1	PSF
	DL	=	5.0	PSF
BOT CH.	LL	=	0.0	PSF
	DL	=	7.0	PSF
TOTAL LOAD		=	60.0	PSF

SPACING = 24.0 IN. C/C

THIS TRUSS IS DESIGNED FOR RESIDENTIAL OR SMALL BUILDING REQUIREMENTS OF PART 9, NBCC 2015

THIS DESIGN COMPLIES WITH:
- PART 9 OF BCBC 2018 , ABC 2019
- PART 9 OF OBC 2012 (2019 AMENDMENT)
- CSA 086-14
- TPIC 2014

DESIGN ASSUMPTIONS
-OVERHANG NOT TO BE ALTERED OR CUT OFF.

(55 % OF 83.6 P.S.F. G.S.L. PLUS 2.1 P.S.F. RAIN LOAD) EQUALS 48.1 P.S.F. SPECIFIED ROOF LIVE LOAD

ALLOWABLE DEFL.(LL)= L/180 (0.39")
CALCULATED VERT. DEFL.(LL) = L/ 999 (0.00")
ALLOWABLE DEFL.(TL)= L/180 (0.39")
CALCULATED VERT. DEFL.(TL) = L/ 999 (0.03")

CONTINUED ON PAGE 2

JOB NAME	TRUSS NAME	QUANTITY	PLY	JOB DESC. Woodcreek / Adkins	DRWG NO.
211770	J4	1	1	TRUSS DESC.	

KAMLOOPS TRUSS LTD., Kamloops, BC V2H 1G3

Version 8.420 S Mar 22 2021 MiTek Industries, Inc. Thu May 27 07:07:07 2021 Page 2

ID:X2qvwXGfFYBXzZFI6ldjmRzCaiR-PkfbddbGWYv6YvYVEfwLBVu?M6JN3oMVmbSYBgzCLVo

PLATES (table is in inches)

JT	TYPE	PLATES	W	LEN	Y	X
B	TMV+p	MT20	2.0	4.0		
E	BMV1+p	MT20	2.0	4.0		

LOADING

TOTAL LOAD CASES: (4)

C H O R D S

MEMB. FR-TO	MAX. FACTORED FORCE (LBS)	FACTORED VERT. LOAD (PLF) FROM	TO	LC1 MAX CSI (LC)	MAX. UNBRAC LENGTH
E- B	-696 / 0	0.0	0.0	0.08 (4)	7.81
A- B	0 / 92	-156.6	-156.6	0.36 (1)	10.00
B- C	-46 / 0	-156.6	-156.6	0.35 (1)	6.25
E- D	0 / 0	-17.5	-17.5	0.11 (4)	10.00

W E B S

MEMB. FR-TO	MAX. FACTORED FORCE (LBS)	MAX CSI (LC)

CSI: TC=0.36/1.00 (A-B:1) , BC=0.11/1.00 (D-E:4) , WB=0.00/1.00 (n/a:0) , SSI=0.24/1.00 (B-C:1)

DOL LUMBER=1.00 NAIL=1.00 LS BEND=1.10 COMP=1.10 SHEAR=1.10 TENS= 1.10

COMPANION LIVE LOAD FACTOR = 1.00

AUTOSOLVE RIGHT HEEL ONLY

TRUSS PLATE MANUFACTURER IS NOT RESPONSIBLE FOR QUALITY CONTROL IN THE TRUSS MANUFACTURING PLANT .

NAIL VALUES

PLATE	GRIP(DRY) (PSI) MAX	MIN	SHEAR (PLI) MAX	MIN	SECTION (PLI) MAX	MIN
MT20	650	371	1747	788	1987	1873

PLATE PLACEMENT TOL. = 0.250 inches

PLATE ROTATION TOL. = 5.0 Deg.

JSI GRIP= 0.45 (B) (INPUT = 0.90)
JSI METAL= 0.37 (B) (INPUT = 1.00)

JOB NAME	TRUSS NAME	QUANTITY	PLY	JOB DESC. Woodcreek / Adkins	DRWG NO.
211770	J5	1	1	TRUSS DESC.	

KAMLOOPS TRUSS LTD., Kamloops, BC V2H 1G3

Version 8.420 S Mar 22 2021 MiTek Industries, Inc. Thu May 27 07:07:09 2021 Page 1

ID:X2qvwXGfFYBXzZFl6ldjmRzCaiR-L7nM2JdW2A9qnDiuM4ypGwzLsv?7XisoEvxfGYzCLVm

Scale = 1:20.8

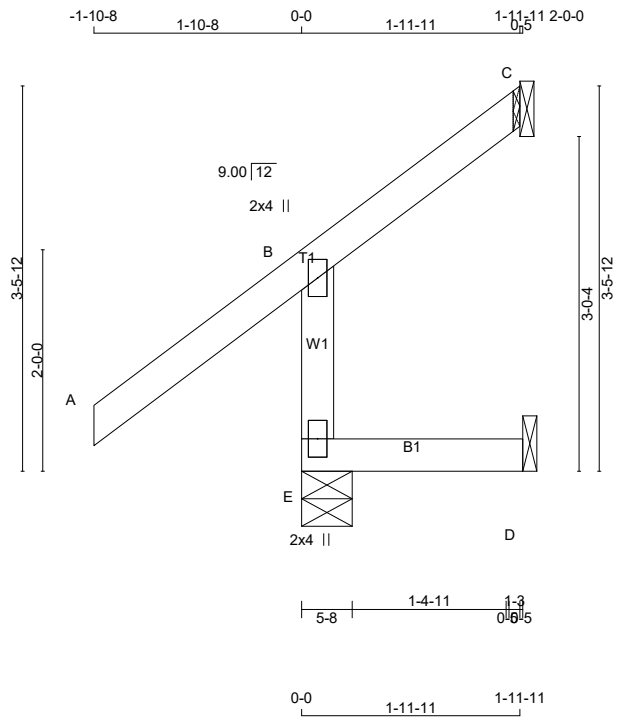

TOTAL WEIGHT = 10 lb

LUMBER

N. L. G. A. RULES

CHORDS	SIZE		LUMBER	DESCR.
E - B	2x4	DRY	1650F 1.5E	SPF
A - C	2x4	DRY	1650F 1.5E	SPF
E - D	2x4	DRY	1650F 1.5E	SPF

DRY: SEASONED LUMBER.

DIMENSIONS, SUPPORTS AND LOADINGS SPECIFIED BY FABRICATOR TO BE VERIFIED BY BUILDING DESIGNER

BEARINGS

	FACTORED GROSS REACTION		MAXIMUM FACTORED GROSS REACTION			INPUT BRG	REQRD BRG
JT	VERT	HORZ	DOWN	HORZ	UPLIFT	IN-SX	IN-SX
E	632	0	632	0	0	5-8	1-8
C	33	0	33	0	-104	1-8	1-8
D	-13	0	16	0	-27	1-8	1-8

SEE MITEK STANDARD DETAIL MSD2015-H FOR CONNECTION TO JOINT(S) C , D

PROVIDE ANCHORAGE AT BEARING JOINT C FOR 150 LBS FACTORED UPLIFT
PROVIDE ANCHORAGE AT BEARING JOINT D FOR 150 LBS FACTORED UPLIFT

UNFACTORED REACTIONS

	1ST LCASE	MAX./MIN. COMPONENT REACTIONS					
JT	COMBINED	SNOW	LIVE	PERM.LIVE	WIND	DEAD	SOIL
E	430	377 / 0	0 / 0	0 / 0	0 / 0	53 / 0	0 / 0
C	23	20 / -69	0 / 0	0 / 0	0 / 0	3 / 0	0 / 0
D	-7	0 / -24	0 / 0	0 / 0	0 / 0	11 / 0	0 / 0

BEARING MATERIAL TO BE SPF NO.2 OR BETTER AT JOINT(S) E

BRACING

TOP CHORD TO BE SHEATHED OR MAX. PURLIN SPACING = 6.25 FT.
MAX. UNBRACED BOTTOM CHORD LENGTH = 10.00 FT OR RIGID CEILING DIRECTLY APPLIED.

ALL PITCH BREAKS AND PERIMETER CORNER JOINTS MUST BE LATERALLY RESTRAINED.

[M]

DESIGN CRITERIA

SPECIFIED LOADS:

TOP CH.	LL	=	48.1	PSF
	DL	=	5.0	PSF
BOT CH.	LL	=	0.0	PSF
	DL	=	7.0	PSF
TOTAL LOAD		=	60.0	PSF

SPACING = 24.0 IN. C/C

THIS TRUSS IS DESIGNED FOR RESIDENTIAL OR SMALL BUILDING REQUIREMENTS OF PART 9, NBCC 2015

THIS DESIGN COMPLIES WITH:
- PART 9 OF BCBC 2018 , ABC 2019
- PART 9 OF OBC 2012 (2019 AMENDMENT)
- CSA 086-14
- TPIC 2014

DESIGN ASSUMPTIONS
-OVERHANG NOT TO BE ALTERED OR CUT OFF.

(55 % OF 83.6 P.S.F. G.S.L. PLUS 2.1 P.S.F. RAIN LOAD) EQUALS 48.1 P.S.F. SPECIFIED ROOF LIVE LOAD

ALLOWABLE DEFL.(LL)= L/180 (0.19")
CALCULATED VERT. DEFL.(LL) = L/ 999 (0.00")
ALLOWABLE DEFL.(TL)= L/180 (0.19")
CALCULATED VERT. DEFL.(TL) = L/ 999 (0.00")

CONTINUED ON PAGE 2

JOB NAME	TRUSS NAME	QUANTITY	PLY	JOB DESC. Woodcreek / Adkins	DRWG NO.
211770	J5	1	1	TRUSS DESC.	

KAMLOOPS TRUSS LTD., Kamloops, BC V2H 1G3

Version 8.420 S Mar 22 2021 MiTek Industries, Inc. Thu May 27 07:07:09 2021 Page 2

ID:X2qvwXGfFYBXzZFl6ldjmRzCaiR-L7nM2JdW2A9qnDiuM4ypGwzLsv?7XisoEvxfGYzCLVm

PLATES (table is in inches)

JT	TYPE	PLATES	W	LEN	Y	X
B	TMV+p	MT20	2.0	4.0		
E	BMV1+p	MT20	2.0	4.0		

LOADING

TOTAL LOAD CASES: (5)

CHORDS

MEMB. FR-TO	MAX. FACTORED FORCE (LBS)	VERT. LOAD LC1 FROM (PLF)	TO	MAX CSI (LC)	MAX. UNBRAC LENGTH
E- B	-584 / 0	0.0	0.0	0.09 (5)	7.81
A- B	0 / 92	-156.6	-156.6	0.36 (1)	10.00
B- C	-73 / 0	-156.6	-156.6	0.27 (1)	6.25
E- D	0 / 0	-17.5	-17.5	0.09 (5)	10.00

WEBS

MEMB. FR-TO	MAX. FACTORED FORCE (LBS)	MAX CSI (LC)

CANTILEVER ANALYSIS HAS BEEN CONSIDERED IN THIS DESIGN

CSI: TC=0.36/1.00 (A-B:1) , BC=0.09/1.00 (D-E:5) , WB=0.00/1.00 (n/a:0) , SSI=0.19/1.00 (A-B:1)

DOL LUMBER=1.00 NAIL=1.00 LS BEND=1.10 COMP=1.10 SHEAR=1.10 TENS= 1.10

COMPANION LIVE LOAD FACTOR = 1.00

AUTOSOLVE RIGHT HEEL ONLY

TRUSS PLATE MANUFACTURER IS NOT RESPONSIBLE FOR QUALITY CONTROL IN THE TRUSS MANUFACTURING PLANT .

NAIL VALUES

PLATE	GRIP(DRY) (PSI) MAX	MIN	SHEAR (PLI) MAX	MIN	SECTION (PLI) MAX	MIN
MT20	650	371	1747	788	1987	1873

PLATE PLACEMENT TOL. = 0.250 inches

PLATE ROTATION TOL. = 5.0 Deg.

JSI GRIP= 0.38 (B) (INPUT = 0.90)
JSI METAL= 0.31 (B) (INPUT = 1.00)

JOB NAME	TRUSS NAME	QUANTITY	PLY	JOB DESC. Woodcreek / Adkins	DRWG NO.
211770	J6	1	1	TRUSS DESC.	

KAMLOOPS TRUSS LTD., Kamloops, BC V2H 1G3

Version 8.420 S Mar 22 2021 MiTek Industries, Inc. Thu May 27 07:07:10 2021 Page 1

ID:X2qvwXGfFYBXzZFl6ldjmRzCaiR-pJLkFfd8pTHhPMH4vnT2o7WWcJMYG96xTZgCo?zCLVI

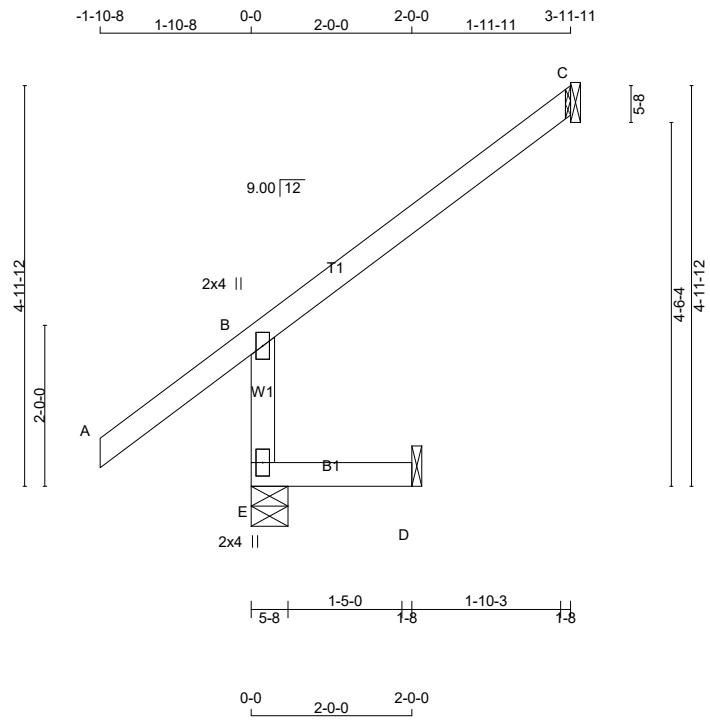

TOTAL WEIGHT = 13 lb

[M]

LUMBER

N. L. G. A. RULES

CHORDS	SIZE		LUMBER	DESCR.
E - B	2x4	DRY	1650F 1.5E	SPF
A - C	2x4	DRY	1650F 1.5E	SPF
E - D	2x4	DRY	1650F 1.5E	SPF

DRY: SEASONED LUMBER.

DIMENSIONS, SUPPORTS AND LOADINGS SPECIFIED BY FABRICATOR TO BE VERIFIED BY BUILDING DESIGNER

BEARINGS

	FACTORED GROSS REACTION		MAXIMUM FACTORED GROSS REACTION			INPUT BRG	REQRD BRG
JT	VERT	HORZ	DOWN	HORZ	UPLIFT	IN-SX	IN-SX
E	715	0	715	0	0	5-8	1-8
C	234	0	234	0	0	1-8	1-8
D	16	0	18	0	0	1-8	1-8

SEE MITEK STANDARD DETAIL MSD2015-H FOR CONNECTION TO JOINT(S) C , D

UNFACTORED REACTIONS

	1ST LCASE	MAX./MIN. COMPONENT REACTIONS					
JT	COMBINED	SNOW	LIVE	PERM.LIVE	WIND	DEAD	SOIL
E	486	427 / 0	0 / 0	0 / 0	0 / 0	59 / 0	0 / 0
C	158	143 / 0	0 / 0	0 / 0	0 / 0	15 / 0	0 / 0
D	13	0 / 0	0 / 0	0 / 0	0 / 0	13 / 0	0 / 0

BEARING MATERIAL TO BE SPF NO.2 OR BETTER AT JOINT(S) E

BRACING

TOP CHORD TO BE SHEATHED OR MAX. PURLIN SPACING = 6.25 FT.
MAX. UNBRACED BOTTOM CHORD LENGTH = 10.00 FT OR RIGID CEILING DIRECTLY APPLIED.

ALL PITCH BREAKS AND PERIMETER CORNER JOINTS MUST BE LATERALLY RESTRAINED.

DESIGN CRITERIA

SPECIFIED LOADS:

TOP CH.	LL	=	48.1	PSF
	DL	=	5.0	PSF
BOT CH.	LL	=	0.0	PSF
	DL	=	7.0	PSF
TOTAL LOAD		=	60.0	PSF

SPACING = 24.0 IN. C/C

THIS TRUSS IS DESIGNED FOR RESIDENTIAL OR SMALL BUILDING REQUIREMENTS OF PART 9, NBCC 2015

THIS DESIGN COMPLIES WITH:
- PART 9 OF BCBC 2018 , ABC 2019
- PART 9 OF OBC 2012 (2019 AMENDMENT)
- CSA 086-14
- TPIC 2014

DESIGN ASSUMPTIONS
-OVERHANG NOT TO BE ALTERED OR CUT OFF.

(55 % OF 83.6 P.S.F. G.S.L. PLUS 2.1 P.S.F. RAIN LOAD) EQUALS 48.1 P.S.F. SPECIFIED ROOF LIVE LOAD

ALLOWABLE DEFL.(LL)= L/180 (0.19")
CALCULATED VERT. DEFL.(LL) = L/ 999 (0.00")
ALLOWABLE DEFL.(TL)= L/180 (0.19")
CALCULATED VERT. DEFL.(TL) = L/ 999 (0.00")

CONTINUED ON PAGE 2

JOB NAME	TRUSS NAME	QUANTITY	PLY	JOB DESC. Woodcreek / Adkins	DRWG NO.
211770	J6	1	1	TRUSS DESC.	

KAMLOOPS TRUSS LTD., Kamloops, BC V2H 1G3

Version 8.420 S Mar 22 2021 MiTek Industries, Inc. Thu May 27 07:07:10 2021 Page 2

ID:X2qvwXGfFYBXzZFl6ldjmRzCaiR-pJLkFfd8pTHhPMH4vnT2o7WWcJMYG96xTZgCo?zCLVI

PLATES (table is in inches)

JT	TYPE	PLATES	W	LEN	Y	X
B	TMV+p	MT20	2.0	4.0		
E	BMV1+p	MT20	2.0	4.0		

LOADING

TOTAL LOAD CASES: (5)

CHORDS

MEMB. FR-TO	MAX. FACTORED FORCE (LBS)	VERT. LOAD LC1 FROM (PLF)	TO	MAX CSI (LC)	MAX. UNBRAC LENGTH
E- B	-696 / 0	0.0	0.0	0.01 (1)	7.81
A- B	0 / 92	-156.6	-156.6	0.36 (1)	10.00
B- C	-46 / 0	-156.6	-156.6	0.35 (1)	6.25
E- D	0 / 0	-17.5	-17.5	0.01 (4)	10.00

WEBS

MEMB. FR-TO	MAX. FACTORED FORCE (LBS)	MAX CSI (LC)

CANTILEVER ANALYSIS HAS BEEN CONSIDERED IN THIS DESIGN

CSI: TC=0.36/1.00 (A-B:1) , BC=0.01/1.00 (D-E:4) , WB=0.00/1.00 (n/a:0) , SSI=0.24/1.00 (B-C:1)

DOL LUMBER=1.00 NAIL=1.00 LS BEND=1.10 COMP=1.10 SHEAR=1.10 TENS= 1.10

COMPANION LIVE LOAD FACTOR = 1.00

AUTOSOLVE RIGHT HEEL ONLY

TRUSS PLATE MANUFACTURER IS NOT RESPONSIBLE FOR QUALITY CONTROL IN THE TRUSS MANUFACTURING PLANT .

NAIL VALUES

PLATE	GRIP(DRY) (PSI) MAX	MIN	SHEAR (PLI) MAX	MIN	SECTION (PLI) MAX	MIN
MT20	650	371	1747	788	1987	1873

PLATE PLACEMENT TOL. = 0.250 inches

PLATE ROTATION TOL. = 5.0 Deg.

JSI GRIP= 0.45 (B) (INPUT = 0.90)
JSI METAL= 0.37 (B) (INPUT = 1.00)

JOB NAME	TRUSS NAME	QUANTITY	PLY	JOB DESC. Woodcreek / Adkins	DRWG NO.
211770	J7	1	1	TRUSS DESC.	

KAMLOOPS TRUSS LTD., Kamloops, BC V2H 1G3

Version 8.420 S Mar 22 2021 MiTek Industries, Inc. Thu May 27 07:07:12 2021 Page 1

ID:X2qvwXGfFYBXzZFl6ldjmRzCaiR-liSUgLfOL5XPegRT1CVWuYbmu70fk3bEwt9JttzCLVj

Scale = 1:37.4

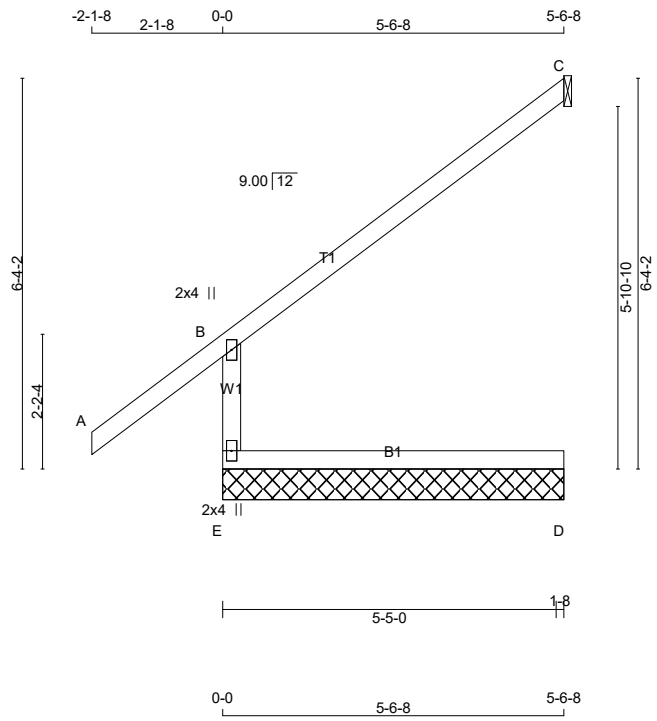

TOTAL WEIGHT = 19 lb

LUMBER

N. L. G. A. RULES

CHORDS	SIZE		LUMBER	DESCR.
E - B	2x4	DRY	1650F 1.5E	SPF
A - C	2x4	DRY	1650F 1.5E	SPF
E - D	2x4	DRY	1650F 1.5E	SPF

DRY: SEASONED LUMBER.

DIMENSIONS, SUPPORTS AND LOADINGS SPECIFIED BY FABRICATOR TO BE VERIFIED BY BUILDING DESIGNER

BEARINGS

	FACTORED GROSS REACTION		MAXIMUM FACTORED GROSS REACTION			INPUT BRG	REQRD BRG
JT	VERT	HORZ	DOWN	HORZ	UPLIFT	IN-SX	IN-SX
E	943	0	943	0	0	5-6-8	1-8
C	326	0	326	0	0	1-8	1-8
D	42	0	48	0	0	5-6-8	1-8

SEE MITEK STANDARD DETAIL MSD2015-H FOR CONNECTION TO JOINT(S) C

UNFACTORED REACTIONS

	1ST LCASE	MAX./MIN. COMPONENT REACTIONS					
JT	COMBINED	SNOW	LIVE	PERM.LIVE	WIND	DEAD	SOIL
E	646	545 / 0	0 / 0	0 / 0	0 / 0	100 / 0	0 / 0
C	221	200 / 0	0 / 0	0 / 0	0 / 0	21 / 0	0 / 0
D	34	0 / 0	0 / 0	0 / 0	0 / 0	34 / 0	0 / 0

BEARING MATERIAL TO BE SPF NO.2 OR BETTER AT JOINT(S) E, D

BRACING

TOP CHORD TO BE SHEATHED OR MAX. PURLIN SPACING = 6.25 FT.
MAX. UNBRACED BOTTOM CHORD LENGTH = 10.00 FT OR RIGID CEILING DIRECTLY APPLIED.

ALL PITCH BREAKS AND PERIMETER CORNER JOINTS MUST BE LATERALLY RESTRAINED.

[M]

DESIGN CRITERIA

SPECIFIED LOADS:

TOP CH.	LL	=	48.1	PSF
	DL	=	5.0	PSF
BOT CH.	LL	=	0.0	PSF
	DL	=	7.0	PSF
TOTAL LOAD		=	60.0	PSF

SPACING = 24.0 IN. C/C

THIS TRUSS IS DESIGNED FOR RESIDENTIAL OR SMALL BUILDING REQUIREMENTS OF PART 9, NBCC 2015

THIS DESIGN COMPLIES WITH:
- PART 9 OF BCBC 2018 , ABC 2019
- PART 9 OF OBC 2012 (2019 AMENDMENT)
- CSA 086-14
- TPIC 2014

DESIGN ASSUMPTIONS
-OVERHANG NOT TO BE ALTERED OR CUT OFF.

(55 % OF 83.6 P.S.F. G.S.L. PLUS 2.1 P.S.F. RAIN LOAD) EQUALS 48.1 P.S.F. SPECIFIED ROOF LIVE LOAD

ALLOWABLE DEFL.(LL)= L/180 (0.37")
CALCULATED VERT. DEFL.(LL) = L/ 999 (0.00")
ALLOWABLE DEFL.(TL)= L/180 (0.37")
CALCULATED VERT. DEFL.(TL) = L/ 999 (0.03")

CONTINUED ON PAGE 2

JOB NAME	TRUSS NAME	QUANTITY	PLY	JOB DESC. Woodcreek / Adkins	DRWG NO.
211770	J7	1	1	TRUSS DESC.	

KAMLOOPS TRUSS LTD., Kamloops, BC V2H 1G3

Version 8.420 S Mar 22 2021 MiTek Industries, Inc. Thu May 27 07:07:12 2021 Page 2

ID:X2qvwXGfFYBXzZFl6ldjmRzCaiR-liSUgLfOL5XPegRT1CVWuYbmu70fk3bEwt9JttzCLVj

PLATES (table is in inches)

JT	TYPE	PLATES	W	LEN	Y	X
B	TMV+p	MT20	2.0	4.0		
E	BMV1+p	MT20	2.0	4.0		

LOADING

TOTAL LOAD CASES: (5)

CHORDS

MEMB. FR-TO	MAX. FACTORED FORCE (LBS)	FACTORED VERT. LOAD (PLF)	LC1 FROM	LC1 TO	MAX CSI (LC)
E- B	-889 / 0	0.0	0.0		0.07 (4)
A- B	0 / 104	-156.6	-156.6		0.45 (1)
B- C	-65 / 0	-156.6	-156.6		0.69 (1)
E- D	0 / 0	-17.5	-17.5		0.10 (4)

WEBS

MEMB. FR-TO	MAX. UNBRAC LENGTH	MAX. FACTORED FORCE (LBS)	MAX CSI (LC)
E- B	7.81		
A- B	10.00		
B- C	6.25		
E- D	10.00		

CANTILEVER ANALYSIS HAS BEEN CONSIDERED IN THIS DESIGN

CSI: TC=0.69/1.00 (B-C:1) , BC=0.10/1.00 (D-E:4) , WB=0.00/1.00 (n/a:0) , SSI=0.34/1.00 (B-C:1)

DOL LUMBER=1.00 NAIL=1.00 LS BEND=1.10 COMP=1.10 SHEAR=1.10 TENS= 1.10

COMPANION LIVE LOAD FACTOR = 1.00

AUTOSOLVE RIGHT HEEL ONLY

TRUSS PLATE MANUFACTURER IS NOT RESPONSIBLE FOR QUALITY CONTROL IN THE TRUSS MANUFACTURING PLANT .

NAIL VALUES

PLATE	GRIP(DRY) (PSI) MAX	MIN	SHEAR (PLI) MAX	MIN	SECTION (PLI) MAX	MIN
MT20	650	371	1747	788	1987	1873

PLATE PLACEMENT TOL. = 0.250 inches

PLATE ROTATION TOL. = 5.0 Deg.

JSI GRIP= 0.58 (B) (INPUT = 0.90)
JSI METAL= 0.47 (B) (INPUT = 1.00)

JOB NAME	TRUSS NAME	QUANTITY	PLY	JOB DESC. Woodcreek / Adkins	DRWG NO.
211770	J8	5	1	TRUSS DESC.	

KAMLOOPS TRUSS LTD., Kamloops, BC V2H 1G3

Version 8.420 S Mar 22 2021 MiTek Industries, Inc. Thu May 27 07:07:14 2021 Page 1

ID:X2qvwXGfFYBXzZFl6ldjmRzCaiR-i4aE51hftin7u as8dY zzq6Owi7Cz5XOBeQxmzCLVh

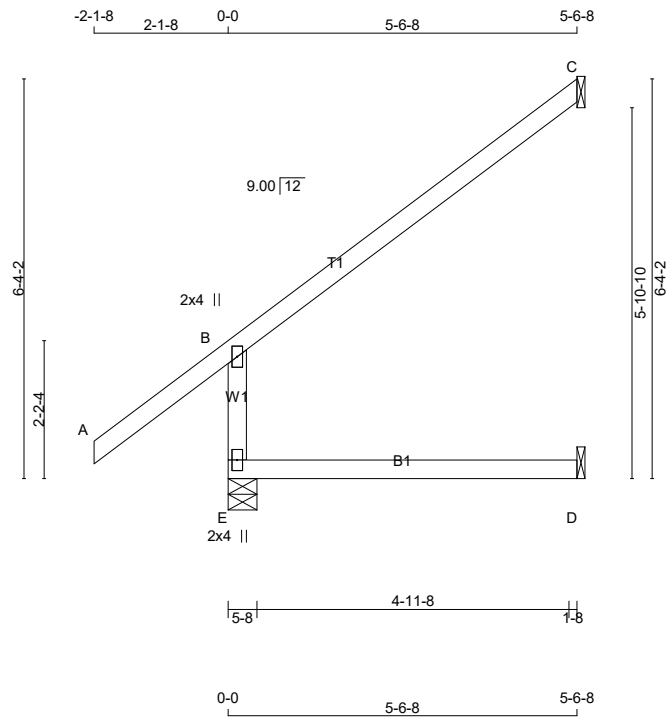

TOTAL WEIGHT = 5 X 19 = 97 lb

[M]

LUMBER

N. L. G. A. RULES

CHORDS	SIZE		LUMBER	DESCR.
E - B	2x4	DRY	1650F 1.5E	SPF
A - C	2x4	DRY	1650F 1.5E	SPF
E - D	2x4	DRY	1650F 1.5E	SPF

DRY: SEASONED LUMBER.

DIMENSIONS, SUPPORTS AND LOADINGS SPECIFIED BY FABRICATOR TO BE VERIFIED BY BUILDING DESIGNER

BEARINGS

	FACTORED GROSS REACTION		MAXIMUM FACTORED GROSS REACTION			INPUT BRG	REQRD BRG
JT	VERT	HORZ	DOWN	HORZ	UPLIFT	IN-SX	IN-SX
E	943	0	943	0	0	5-8	1-8
C	326	0	326	0	0	1-8	1-8
D	42	0	48	0	0	1-8	1-8

SEE MITEK STANDARD DETAIL MSD2015-H FOR CONNECTION TO JOINT(S) C , D

UNFACTORED REACTIONS

	1ST LCASE	MAX./MIN. COMPONENT REACTIONS					
JT	COMBINED	SNOW	LIVE	PERM.LIVE	WIND	DEAD	SOIL
E	646	545 / 0	0 / 0	0 / 0	0 / 0	100 / 0	0 / 0
C	221	200 / 0	0 / 0	0 / 0	0 / 0	21 / 0	0 / 0
D	34	0 / 0	0 / 0	0 / 0	0 / 0	34 / 0	0 / 0

BEARING MATERIAL TO BE SPF NO.2 OR BETTER AT JOINT(S) E

BRACING

TOP CHORD TO BE SHEATHED OR MAX. PURLIN SPACING = 6.25 FT.
MAX. UNBRACED BOTTOM CHORD LENGTH = 10.00 FT OR RIGID CEILING DIRECTLY APPLIED.

ALL PITCH BREAKS AND PERIMETER CORNER JOINTS MUST BE LATERALLY RESTRAINED.

DESIGN CRITERIA

SPECIFIED LOADS:

TOP	CH.	LL	=	48.1	PSF
		DL	=	5.0	PSF
BOT	CH.	LL	=	0.0	PSF
		DL	=	7.0	PSF
TOTAL	LOAD		=	60.0	PSF

SPACING = 24.0 IN. C/C

THIS TRUSS IS DESIGNED FOR RESIDENTIAL OR SMALL BUILDING REQUIREMENTS OF PART 9, NBCC 2015

THIS DESIGN COMPLIES WITH:
- PART 9 OF BCBC 2018 , ABC 2019
- PART 9 OF OBC 2012 (2019 AMENDMENT)
- CSA 086-14
- TPIC 2014

DESIGN ASSUMPTIONS
-OVERHANG NOT TO BE ALTERED OR CUT OFF.

(55 % OF 83.6 P.S.F. G.S.L. PLUS 2.1 P.S.F. RAIN LOAD) EQUALS 48.1 P.S.F. SPECIFIED ROOF LIVE LOAD

ALLOWABLE DEFL.(LL)= L/180 (0.37")
CALCULATED VERT. DEFL.(LL) = L/ 999 (0.00")
ALLOWABLE DEFL.(TL)= L/180 (0.37")
CALCULATED VERT. DEFL.(TL) = L/ 999 (0.03")

CONTINUED ON PAGE 2

JOB NAME	TRUSS NAME	QUANTITY	PLY	JOB DESC. Woodcreek / Adkins	DRWG NO.
211770	J8	5	1	TRUSS DESC.	

KAMLOOPS TRUSS LTD., Kamloops, BC V2H 1G3

ID:X2qvwXGfFYBXzZFl6ldjmRzCaiR-i4aE51hftin7u_as8dY_zzg6Owi7Cz5XOBeQxmzCLVh

PLATES (table is in inches)

JT	TYPE	PLATES	W	LEN	Y	X
B	TMV+p	MT20	2.0	4.0		
E	BMV1+p	MT20	2.0	4.0		

LOADING

TOTAL LOAD CASES: (5)

CHORDS

MEMB. FR-TO	MAX. FACTORED FORCE (LBS)	VERT. LOAD LC1 FROM (PLF)	TO	MAX CSI (LC)	MAX. UNBRAC LENGTH
E- B	-889 / 0	0.0	0.0	0.07 (4)	7.81
A- B	0 / 104	-156.6	-156.6	0.45 (1)	10.00
B- C	-65 / 0	-156.6	-156.6	0.69 (1)	6.25
E- D	0 / 0	-17.5	-17.5	0.10 (4)	10.00

WEBS

MEMB. FR-TO	MAX. FACTORED FORCE (LBS)	MAX CSI (LC)

CANTILEVER ANALYSIS HAS BEEN CONSIDERED IN THIS DESIGN

CSI: TC=0.69/1.00 (B-C:1) , BC=0.10/1.00 (D-E:4) , WB=0.00/1.00 (n/a:0) , SSI=0.34/1.00 (B-C:1)

DOL LUMBER=1.00 NAIL=1.00 LS BEND=1.10 COMP=1.10 SHEAR=1.10 TENS= 1.10

COMPANION LIVE LOAD FACTOR = 1.00

AUTOSOLVE RIGHT HEEL ONLY

TRUSS PLATE MANUFACTURER IS NOT RESPONSIBLE FOR QUALITY CONTROL IN THE TRUSS MANUFACTURING PLANT .

NAIL VALUES

PLATE	GRIP(DRY) (PSI) MAX	MIN	SHEAR (PLI) MAX	MIN	SECTION (PLI) MAX	MIN
MT20	650	371	1747	788	1987	1873

PLATE PLACEMENT TOL. = 0.250 inches

PLATE ROTATION TOL. = 5.0 Deg.

JSI GRIP= 0.58 (B) (INPUT = 0.90)
JSI METAL= 0.47 (B) (INPUT = 1.00)

JOB NAME	TRUSS NAME	QUANTITY	PLY	JOB DESC. Woodcreek / Adkins	DRWG NO.
211770	J9	1	1	TRUSS DESC.	

KAMLOOPS TRUSS LTD., Kamloops, BC V2H 1G3

ID:X2qvwXGfFYBXzZFl6ldjmRzCaiR-AH8dINhHe0v_V892iK3DVBDH8K2MxQLqcrOzTCzCLVg

Scale = 1:36.6

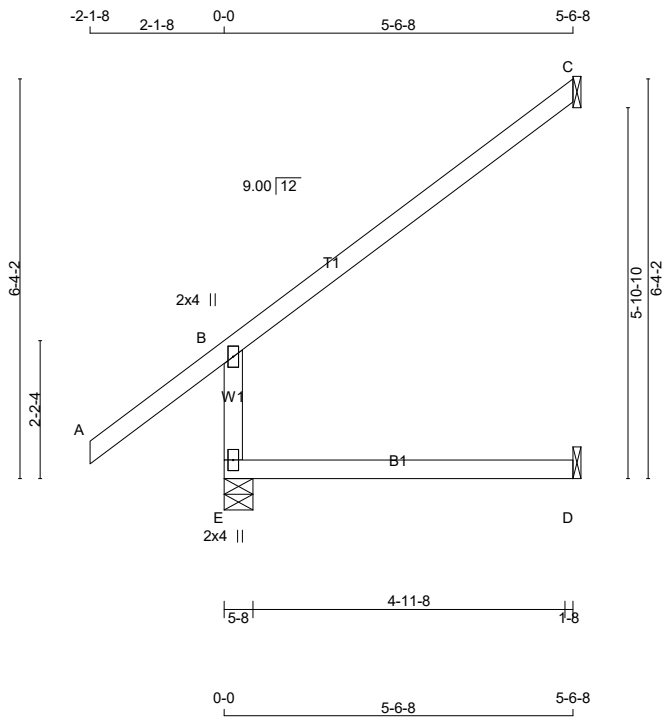

TOTAL WEIGHT = 19 lb

LUMBER

N. L. G. A. RULES

CHORDS	SIZE		LUMBER	DESCR.
E - B	2x4	DRY	1650F 1.5E	SPF
A - C	2x4	DRY	1650F 1.5E	SPF
E - D	2x4	DRY	1650F 1.5E	SPF

DRY: SEASONED LUMBER.

DIMENSIONS, SUPPORTS AND LOADINGS SPECIFIED BY FABRICATOR TO BE VERIFIED BY BUILDING DESIGNER

BEARINGS

	FACTORED GROSS REACTION		MAXIMUM FACTORED GROSS REACTION			INPUT BRG	REQRD BRG
JT	VERT	HORZ	DOWN	HORZ	UPLIFT	IN-SX	IN-SX
E	943	0	943	0	0	5-8	1-8
C	326	0	326	0	0	1-8	1-8
D	42	0	48	0	0	1-8	1-8

SEE MITEK STANDARD DETAIL MSD2015-H FOR CONNECTION TO JOINT(S) C , D

UNFACTORED REACTIONS

	1ST LCASE	MAX./MIN. COMPONENT REACTIONS					
JT	COMBINED	SNOW	LIVE	PERM.LIVE	WIND	DEAD	SOIL
E	646	545 / 0	0 / 0	0 / 0	0 / 0	100 / 0	0 / 0
C	221	200 / 0	0 / 0	0 / 0	0 / 0	21 / 0	0 / 0
D	34	0 / 0	0 / 0	0 / 0	0 / 0	34 / 0	0 / 0

BEARING MATERIAL TO BE SPF NO.2 OR BETTER AT JOINT(S) E

BRACING

TOP CHORD TO BE SHEATHED OR MAX. PURLIN SPACING = 6.25 FT.
MAX. UNBRACED BOTTOM CHORD LENGTH = 10.00 FT OR RIGID CEILING DIRECTLY APPLIED.

ALL PITCH BREAKS AND PERIMETER CORNER JOINTS MUST BE LATERALLY RESTRAINED.

[M]

DESIGN CRITERIA

SPECIFIED LOADS:

TOP CH.	LL	=	48.1	PSF
	DL	=	5.0	PSF
BOT CH.	LL	=	0.0	PSF
	DL	=	7.0	PSF
TOTAL LOAD		=	60.0	PSF

SPACING = 24.0 IN. C/C

THIS TRUSS IS DESIGNED FOR RESIDENTIAL OR SMALL BUILDING REQUIREMENTS OF PART 9, NBCC 2015

THIS DESIGN COMPLIES WITH:
- PART 9 OF BCBC 2018 , ABC 2019
- PART 9 OF OBC 2012 (2019 AMENDMENT)
- CSA 086-14
- TPIC 2014

DESIGN ASSUMPTIONS
-OVERHANG NOT TO BE ALTERED OR CUT OFF.

(55 % OF 83.6 P.S.F. G.S.L. PLUS 2.1 P.S.F. RAIN LOAD) EQUALS 48.1 P.S.F. SPECIFIED ROOF LIVE LOAD

ALLOWABLE DEFL.(LL)= L/180 (0.37")
CALCULATED VERT. DEFL.(LL) = L/ 999 (0.00")
ALLOWABLE DEFL.(TL)= L/180 (0.37")
CALCULATED VERT. DEFL.(TL) = L/ 999 (0.03")

CONTINUED ON PAGE 2

JOB NAME	TRUSS NAME	QUANTITY	PLY	JOB DESC. Woodcreek / Adkins	DRWG NO.
211770	J9	1	1	TRUSS DESC.	

KAMLOOPS TRUSS LTD., Kamloops, BC V2H 1G3

ID:X2qvwXGfFYBXzZFl6ldjmRzCaiR-AH8dINhHe0v_V892iK3DVBDH8K2MxQLgcrOzTCzCLVg

PLATES (table is in inches)

JT	TYPE	PLATES	W	LEN	Y	X
B	TMV+p	MT20	2.0	4.0		
E	BMV1+p	MT20	2.0	4.0		

LOADING

TOTAL LOAD CASES: (5)

CHORDS

MEMB. FR-TO	MAX. FACTORED FORCE (LBS)	FACTORED VERT. LOAD (PLF)	LC1 FROM	LC1 TO	MAX CSI (LC)	MAX. UNBRAC LENGTH
E- B	-889 / 0	0.0	0.0		0.07 (4)	7.81
A- B	0 / 104	-156.6	-156.6		0.45 (1)	10.00
B- C	-65 / 0	-156.6	-156.6		0.69 (1)	6.25
E- D	0 / 0	-17.5	-17.5		0.10 (4)	10.00

WEBS

MEMB. FR-TO	MAX. FACTORED FORCE (LBS)	MAX CSI (LC)

CANTILEVER ANALYSIS HAS BEEN CONSIDERED IN THIS DESIGN

CSI: TC=0.69/1.00 (B-C:1) , BC=0.10/1.00 (D-E:4) , WB=0.00/1.00 (n/a:0) , SSI=0.34/1.00 (B-C:1)

DOL LUMBER=1.00 NAIL=1.00 LS BEND=1.10 COMP=1.10 SHEAR=1.10 TENS= 1.10

COMPANION LIVE LOAD FACTOR = 1.00

AUTOSOLVE RIGHT HEEL ONLY

TRUSS PLATE MANUFACTURER IS NOT RESPONSIBLE FOR QUALITY CONTROL IN THE TRUSS MANUFACTURING PLANT .

NAIL VALUES

PLATE	GRIP(DRY) (PSI) MAX	GRIP(DRY) (PSI) MIN	SHEAR (PLI) MAX	SHEAR (PLI) MIN	SECTION (PLI) MAX	SECTION (PLI) MIN
MT20	650	371	1747	788	1987	1873

PLATE PLACEMENT TOL. = 0.250 inches

PLATE ROTATION TOL. = 5.0 Deg.

JSI GRIP= 0.58 (B) (INPUT = 0.90)
JSI METAL= 0.47 (B) (INPUT = 1.00)

JOB NAME	TRUSS NAME	QUANTITY	PLY	JOB DESC. Woodcreek / Adkins	DRWG NO.
211770	M1	5	1	TRUSS DESC.	

KAMLOOPS TRUSS LTD., Kamloops, BC V2H 1G3

ID:X2qvwXGfFYBXzZFl6ldjmRzCaiR-6fGNj2jX9d9ilRJQql5hbcIgN8kdPKqz49t4Y5zCLVe

Scale = 1:22.5

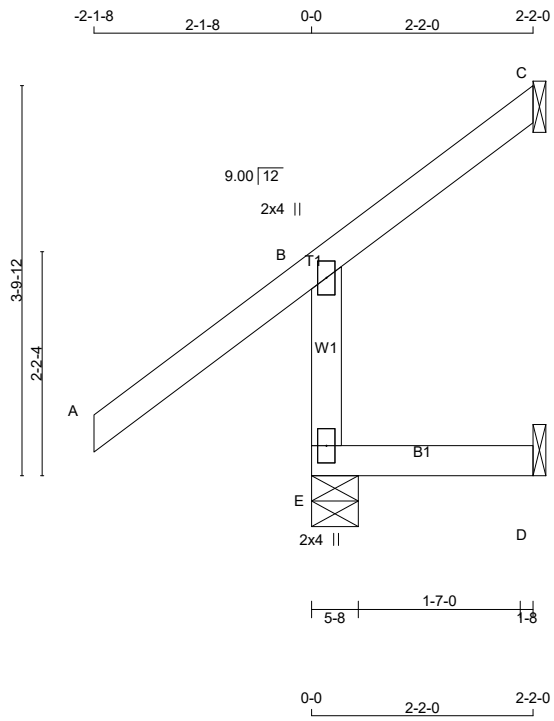

TOTAL WEIGHT = 5 X 11 = 54 lb

[M]

LUMBER

N. L. G. A. RULES

CHORDS	SIZE		LUMBER	DESCR.
A - C	2x4	DRY	1650F 1.5E	SPF
E - B	2x4	DRY	1650F 1.5E	SPF
E - D	2x4	DRY	1650F 1.5E	SPF

DRY: SEASONED LUMBER.

DIMENSIONS, SUPPORTS AND LOADINGS SPECIFIED BY FABRICATOR TO BE VERIFIED BY BUILDING DESIGNER

BEARINGS

	FACTORED GROSS REACTION		MAXIMUM FACTORED GROSS REACTION			INPUT BRG	REQRD BRG
JT	VERT	HORZ	DOWN	HORZ	UPLIFT	IN-SX	IN-SX
C	29	0	29	0	-121	1-8	1-8
E	712	0	712	0	0	5-8	1-8
D	-17	0	17	0	-33	1-8	1-8

SEE MITEK STANDARD DETAIL MSD2015-H FOR CONNECTION TO JOINT(S) C , D

PROVIDE ANCHORAGE AT BEARING JOINT C FOR 150 LBS FACTORED UPLIFT
PROVIDE ANCHORAGE AT BEARING JOINT D FOR 150 LBS FACTORED UPLIFT

UNFACTORED REACTIONS

	1ST LCASE	MAX./MIN. COMPONENT REACTIONS					
JT	COMBINED	SNOW	LIVE	PERM.LIVE	WIND	DEAD	SOIL
C	20	17 / -80	0 / 0	0 / 0	0 / 0	3 / 0	0 / 0
E	485	425 / 0	0 / 0	0 / 0	0 / 0	59 / 0	0 / 0
D	-10	0 / -28	0 / 0	0 / 0	0 / 0	12 / 0	0 / 0

BEARING MATERIAL TO BE SPF NO.2 OR BETTER AT JOINT(S) C, E

BRACING

TOP CHORD TO BE SHEATHED OR MAX. PURLIN SPACING = 6.25 FT.
MAX. UNBRACED BOTTOM CHORD LENGTH = 10.00 FT OR RIGID CEILING DIRECTLY APPLIED.

ALL PITCH BREAKS AND PERIMETER CORNER JOINTS MUST BE LATERALLY RESTRAINED.

DESIGN CRITERIA

SPECIFIED LOADS:

TOP	CH.	LL	=	48.1	PSF
		DL	=	5.0	PSF
BOT	CH.	LL	=	0.0	PSF
		DL	=	7.0	PSF
TOTAL	LOAD		=	60.0	PSF

SPACING = 24.0 IN. C/C

THIS TRUSS IS DESIGNED FOR RESIDENTIAL OR SMALL BUILDING REQUIREMENTS OF PART 9, NBCC 2015

THIS DESIGN COMPLIES WITH:
- PART 9 OF BCBC 2018 , ABC 2019
- PART 9 OF OBC 2012 (2019 AMENDMENT)
- CSA 086-14
- TPIC 2014

DESIGN ASSUMPTIONS
-OVERHANG NOT TO BE ALTERED OR CUT OFF.

(55 % OF 83.6 P.S.F. G.S.L. PLUS 2.1 P.S.F. RAIN LOAD) EQUALS 48.1 P.S.F. SPECIFIED ROOF LIVE LOAD

ALLOWABLE DEFL.(LL)= L/180 (0.19")
CALCULATED VERT. DEFL.(LL) = L/ 999 (0.00")
ALLOWABLE DEFL.(TL)= L/180 (0.19")
CALCULATED VERT. DEFL.(TL) = L/ 999 (0.00")

CONTINUED ON PAGE 2

JOB NAME	TRUSS NAME	QUANTITY	PLY	JOB DESC. Woodcreek / Adkins	DRWG NO.
211770	M1	5	1	TRUSS DESC.	

PLATES (table is in inches)

JT	TYPE	PLATES	W	LEN	Y	X
B	TMV+p	MT20	2.0	4.0		
E	BMV1+p	MT20	2.0	4.0		

LOADING

TOTAL LOAD CASES: (5)

CHORDS

MEMB. FR-TO	MAX. FACTORED FORCE (LBS)	VERT. LOAD LC1 FROM (PLF)	TO	MAX CSI (LC)	MAX. UNBRAC LENGTH FR-TO
A- B	0 / 104	-156.6	-156.6	0.45 (1)	10.00
B- C	-84 / 0	-156.6	-156.6	0.35 (1)	6.25
E- B	-657 / 0	0.0	0.0	0.12 (5)	7.81
E- D	0 / 0	-17.5	-17.5	0.11 (5)	10.00

WEBS

MEMB.	MAX. FACTORED FORCE (LBS)	MAX CSI (LC)

CANTILEVER ANALYSIS HAS BEEN CONSIDERED IN THIS DESIGN

CSI: TC=0.45/1.00 (A-B:1) , BC=0.11/1.00 (D-E:5) , WB=0.00/1.00 (n/a:0) , SSI=0.22/1.00 (A-B:1)

DOL LUMBER=1.00 NAIL=1.00 LS BEND=1.10 COMP=1.10 SHEAR=1.10 TENS= 1.10

COMPANION LIVE LOAD FACTOR = 1.00

AUTOSOLVE RIGHT HEEL ONLY

TRUSS PLATE MANUFACTURER IS NOT RESPONSIBLE FOR QUALITY CONTROL IN THE TRUSS MANUFACTURING PLANT .

NAIL VALUES

PLATE	GRIP(DRY) (PSI) MAX	MIN	SHEAR (PLI) MAX	MIN	SECTION (PLI) MAX	MIN
MT20	650	371	1747	788	1987	1873

PLATE PLACEMENT TOL. = 0.250 inches

PLATE ROTATION TOL. = 5.0 Deg.

JSI GRIP= 0.43 (B) (INPUT = 0.90)
JSI METAL= 0.35 (B) (INPUT = 1.00)

JOB NAME	TRUSS NAME	QUANTITY	PLY	JOB DESC. Woodcreek / Adkins	DRWG NO.
211770	M2	1	1	TRUSS DESC.	

KAMLOOPS TRUSS LTD., Kamloops, BC V2H 1G3

Version 8.420 S Mar 22 2021 MiTek Industries, Inc. Thu May 27 07:07:19 2021 Page 1

ID:X2qvwXGfFYBXzZFl6ldjmRzCaiR-22O78kknhEQP_lTpxA79g1N0sxP5tEKGXTMBdzzCLVc

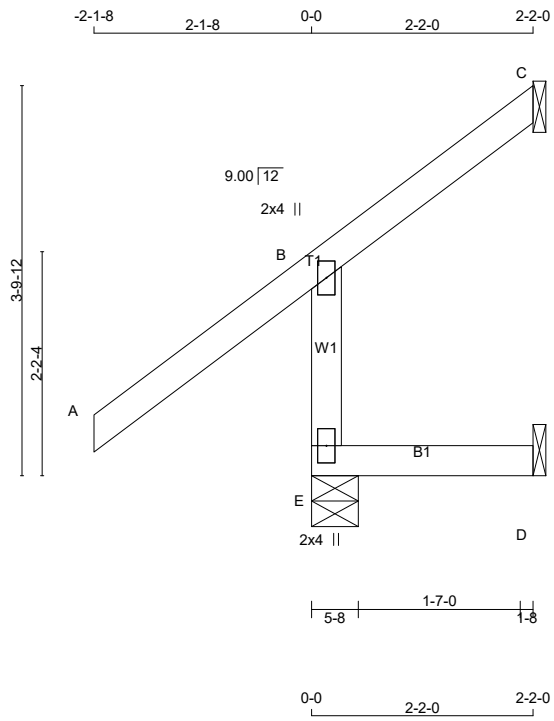

Scale = 1:22.5

TOTAL WEIGHT = 11 lb

LUMBER

N. L. G. A. RULES

CHORDS	SIZE		LUMBER	DESCR.
A - C	2x4	DRY	1650F 1.5E	SPF
E - B	2x4	DRY	1650F 1.5E	SPF
E - D	2x4	DRY	1650F 1.5E	SPF

DRY: SEASONED LUMBER.

DIMENSIONS, SUPPORTS AND LOADINGS SPECIFIED BY FABRICATOR TO BE VERIFIED BY BUILDING DESIGNER

BEARINGS

	FACTORED GROSS REACTION		MAXIMUM FACTORED GROSS REACTION			INPUT BRG	REQRD BRG
JT	VERT	HORZ	DOWN	HORZ	UPLIFT	IN-SX	IN-SX
C	29	0	29	0	-121	1-8	1-8
E	712	0	712	0	0	5-8	1-8
D	-17	0	17	0	-33	1-8	1-8

SEE MITEK STANDARD DETAIL MSD2015-H FOR CONNECTION TO JOINT(S) C , D

PROVIDE ANCHORAGE AT BEARING JOINT C FOR 150 LBS FACTORED UPLIFT
PROVIDE ANCHORAGE AT BEARING JOINT D FOR 150 LBS FACTORED UPLIFT

UNFACTORED REACTIONS

	1ST LCASE	MAX./MIN. COMPONENT REACTIONS					
JT	COMBINED	SNOW	LIVE	PERM.LIVE	WIND	DEAD	SOIL
C	20	17 / -80	0 / 0	0 / 0	0 / 0	3 / 0	0 / 0
E	485	425 / 0	0 / 0	0 / 0	0 / 0	59 / 0	0 / 0
D	-10	0 / -28	0 / 0	0 / 0	0 / 0	12 / 0	0 / 0

BEARING MATERIAL TO BE SPF NO.2 OR BETTER AT JOINT(S) C, E

BRACING

TOP CHORD TO BE SHEATHED OR MAX. PURLIN SPACING = 6.25 FT.
MAX. UNBRACED BOTTOM CHORD LENGTH = 10.00 FT OR RIGID CEILING DIRECTLY APPLIED.

ALL PITCH BREAKS AND PERIMETER CORNER JOINTS MUST BE LATERALLY RESTRAINED.

[M]

DESIGN CRITERIA

SPECIFIED LOADS:

TOP	CH.	LL	=	48.1	PSF
		DL	=	5.0	PSF
BOT	CH.	LL	=	0.0	PSF
		DL	=	7.0	PSF
TOTAL	LOAD		=	60.0	PSF

SPACING = 24.0 IN. C/C

THIS TRUSS IS DESIGNED FOR RESIDENTIAL OR SMALL BUILDING REQUIREMENTS OF PART 9, NBCC 2015

THIS DESIGN COMPLIES WITH:
- PART 9 OF BCBC 2018 , ABC 2019
- PART 9 OF OBC 2012 (2019 AMENDMENT)
- CSA 086-14
- TPIC 2014

DESIGN ASSUMPTIONS
-OVERHANG NOT TO BE ALTERED OR CUT OFF.

(55 % OF 83.6 P.S.F. G.S.L. PLUS 2.1 P.S.F. RAIN LOAD) EQUALS 48.1 P.S.F. SPECIFIED ROOF LIVE LOAD

ALLOWABLE DEFL.(LL)= L/180 (0.19")
CALCULATED VERT. DEFL.(LL) = L/ 999 (0.00")
ALLOWABLE DEFL.(TL)= L/180 (0.19")
CALCULATED VERT. DEFL.(TL) = L/ 999 (0.00")

CONTINUED ON PAGE 2

JOB NAME	TRUSS NAME	QUANTITY	PLY	JOB DESC. Woodcreek / Adkins	DRWG NO.
211770	M2	1	1	TRUSS DESC.	

KAMLOOPS TRUSS LTD., Kamloops, BC V2H 1G3

ID:X2qvwXGfFYBXzZFl6ldjmRzCaiR-22O78kknhEQP_ITpxA79g1N0sxP5tEKGXTMBdzzCLVc

PLATES (table is in inches)

JT	TYPE	PLATES	W	LEN	Y	X
B	TMV+p	MT20	2.0	4.0		
E	BMV1+p	MT20	2.0	4.0		

LOADING

TOTAL LOAD CASES: (5)

C H O R D S

MEMB. FR-TO	MAX. FACTORED FORCE (LBS)	VERT. LOAD LC1 FROM (PLF)	TO	MAX CSI (LC)	MAX. UNBRAC LENGTH
A- B	0 / 104	-156.6	-156.6	0.45 (1)	10.00
B- C	-84 / 0	-156.6	-156.6	0.35 (1)	6.25
E- B	-657 / 0	0.0	0.0	0.12 (5)	7.81
E- D	0 / 0	-17.5	-17.5	0.11 (5)	10.00

W E B S

MEMB. FR-TO	MAX. FACTORED FORCE (LBS)	MAX CSI (LC)

CANTILEVER ANALYSIS HAS BEEN CONSIDERED IN THIS DESIGN

CSI: TC=0.45/1.00 (A-B:1) , BC=0.11/1.00 (D-E:5) , WB=0.00/1.00 (n/a:0) , SSI=0.22/1.00 (A-B:1)

DOL LUMBER=1.00 NAIL=1.00 LS BEND=1.10 COMP=1.10 SHEAR=1.10 TENS= 1.10

COMPANION LIVE LOAD FACTOR = 1.00

AUTOSOLVE RIGHT HEEL ONLY

TRUSS PLATE MANUFACTURER IS NOT RESPONSIBLE FOR QUALITY CONTROL IN THE TRUSS MANUFACTURING PLANT .

NAIL VALUES

PLATE	GRIP(DRY) (PSI) MAX	MIN	SHEAR (PLI) MAX	MIN	SECTION (PLI) MAX	MIN
MT20	650	371	1747	788	1987	1873

PLATE PLACEMENT TOL. = 0.250 inches

PLATE ROTATION TOL. = 5.0 Deg.

JSI GRIP= 0.43 (B) (INPUT = 0.90)
JSI METAL= 0.35 (B) (INPUT = 1.00)

JOB NAME	TRUSS NAME	QUANTITY	PLY	JOB DESC. Woodcreek / Adkins	DRWG NO.
211770	M3	10	1	TRUSS DESC.	

KAMLOOPS TRUSS LTD., Kamloops, BC V2H 1G3

ID:X2qvwXGfFYBXzZFI6ldjmRzCaiR-?QVuZQm2Dsg7E3dC3bAdlSTTPl5EL8qZ?mrHhszCLVa

Scale = 1:12.6

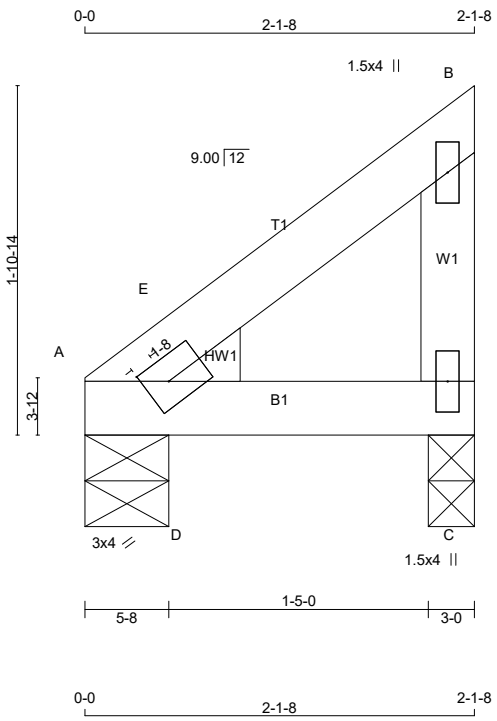

TOTAL WEIGHT = 10 X 7 = 73 lb

LUMBER

N. L. G. A. RULES

CHORDS	SIZE		LUMBER	DESCR.
A - B	2x4	DRY	1650F 1.5E	SPF
C - B	2x4	DRY	1650F 1.5E	SPF
A - C	2x4	DRY	1650F 1.5E	SPF

DRY: SEASONED LUMBER.

DIMENSIONS, SUPPORTS AND LOADINGS SPECIFIED BY FABRICATOR TO BE VERIFIED BY BUILDING DESIGNER

BEARINGS

	FACTORED GROSS REACTION		MAXIMUM FACTORED GROSS REACTION			INPUT BRG	REQRD BRG	
JT	VERT	HORZ	DOWN	HORZ	UPLIFT	IN-SX	IN-SX	HEEL WEDGE
A	185	0	185	0	0	5-8	1-8	2x4 L
C	185	0	185	0	0	3-0	1-8	

UNFACTORED REACTIONS

	1ST LCASE	MAX./MIN. COMPONENT REACTIONS					
JT	COMBINED	SNOW	LIVE	PERM.LIVE	WIND	DEAD	SOIL
A	128	102 / 0	0 / 0	0 / 0	0 / 0	26 / 0	0 / 0
C	128	102 / 0	0 / 0	0 / 0	0 / 0	26 / 0	0 / 0

BEARING MATERIAL TO BE SPF NO.2 OR BETTER AT JOINT(S) A, C

BRACING

TOP CHORD TO BE SHEATHED OR MAX. PURLIN SPACING = 6.25 FT.
MAX. UNBRACED BOTTOM CHORD LENGTH = 10.00 FT OR RIGID CEILING DIRECTLY APPLIED.

ALL PITCH BREAKS AND PERIMETER CORNER JOINTS MUST BE LATERALLY RESTRAINED.

[M][F]

DESIGN CRITERIA

SPECIFIED LOADS:

TOP	CH.	LL	=	48.1	PSF
		DL	=	5.0	PSF
BOT	CH.	LL	=	0.0	PSF
		DL	=	7.0	PSF
TOTAL	LOAD		=	60.0	PSF

SPACING = 24.0 IN. C/C

THIS TRUSS IS DESIGNED FOR RESIDENTIAL OR SMALL BUILDING REQUIREMENTS OF PART 9, NBCC 2015

THIS DESIGN COMPLIES WITH:
- PART 9 OF BCBC 2018 , ABC 2019
- PART 9 OF OBC 2012 (2019 AMENDMENT)
- CSA 086-14
- TPIC 2014

(55 % OF 83.6 P.S.F. G.S.L. PLUS 2.1 P.S.F. RAIN LOAD) EQUALS 48.1 P.S.F. SPECIFIED ROOF LIVE LOAD

ALLOWABLE DEFL.(LL)= L/180 (0.19")
CALCULATED VERT. DEFL.(LL) = L/ 999 (0.00")
ALLOWABLE DEFL.(TL)= L/180 (0.19")
CALCULATED VERT. DEFL.(TL) = L/ 999 (0.00")

CSI: TC=0.06/1.00 (B-E:1) , BC=0.07/1.00 (A-D:1) , WB=0.00/1.00 (D-E:1) , SSI=0.08/1.00 (B-E:1)

CONTINUED ON PAGE 2

JOB NAME	TRUSS NAME	QUANTITY	PLY	JOB DESC. Woodcreek / Adkins	DRWG NO.
211770	M3	10	1	TRUSS DESC.	

KAMLOOPS TRUSS LTD., Kamloops, BC V2H 1G3

Version 8.420 S Mar 22 2021 MiTek Industries, Inc. Thu May 27 07:07:21 2021 Page 2

ID:X2qvwXGfFYBXzZFI6ldjmRzCaiR-?QVuZQm2Dsg7E3dC3bAdlSTTPl5EL8qZ?mrHhszCLVa

PLATES (table is in inches)

JT	TYPE	PLATES	W	LEN	Y	X
A	TBMH1-h	MT20	3.0	4.0	1.50	1.50
B	TMV+p	MT20	1.5	4.0		
C	BMV1+p	MT20	1.5	4.0		

LOADING

TOTAL LOAD CASES: (4)

C H O R D S

MEMB. FR-TO	MAX. FACTORED FORCE (LBS)	VERT. LOAD LC1 FROM	FACTORED (PLF) TO	MAX CSI (LC)	MAX. UNBRAC LENGTH
A- E	-18 / 0	-156.6	-156.6	0.02 (1)	6.25
E- B	0 / 8	-156.6	-156.6	0.06 (1)	10.00
C- B	-130 / 0	0.0	0.0	0.01 (1)	7.81
A- D	0 / 0	-17.5	-17.5	0.07 (1)	10.00
D- C	0 / 0	-17.5	-17.5	0.07 (1)	10.00

W E B S

MEMB. FR-TO	MAX. FACTORED FORCE (LBS)	MAX CSI (LC)
D- E	-122 / 1	0.00 (1)

DOL LUMBER=1.00 NAIL=1.00 LS BEND=1.10 COMP=1.10 SHEAR=1.10
TENS= 1.10

COMPANION LIVE LOAD FACTOR = 1.00

TRUSS PLATE MANUFACTURER IS NOT RESPONSIBLE FOR QUALITY CONTROL IN THE TRUSS MANUFACTURING PLANT .

NAIL VALUES

PLATE	GRIP(DRY) (PSI) MAX	MIN	SHEAR (PLI) MAX	MIN	SECTION (PLI) MAX	MIN
MT20	650	371	1747	788	1987	1873

PLATE PLACEMENT TOL. = 0.250 inches

PLATE ROTATION TOL. = 5.0 Deg.

JSI GRIP= 0.11 (B) (INPUT = 0.90)
JSI METAL= 0.09 (B) (INPUT = 1.00)

JOB NAME	TRUSS NAME	QUANTITY	PLY	JOB DESC. Woodcreek / Adkins	DRWG NO.
211770	M4	4	1	TRUSS DESC.	

KAMLOOPS TRUSS LTD., Kamloops, BC V2H 1G3

Version 8.420 S Mar 22 2021 MiTek Industries, Inc. Thu May 27 07:07:22 2021 Page 1

ID:X2qvwXGfFYBXzZFI6ldjmRzCaiR-Td3Gmmng_9o_rCCOcIhsIf?Xi9P24b4iDQarDIzCLVZ

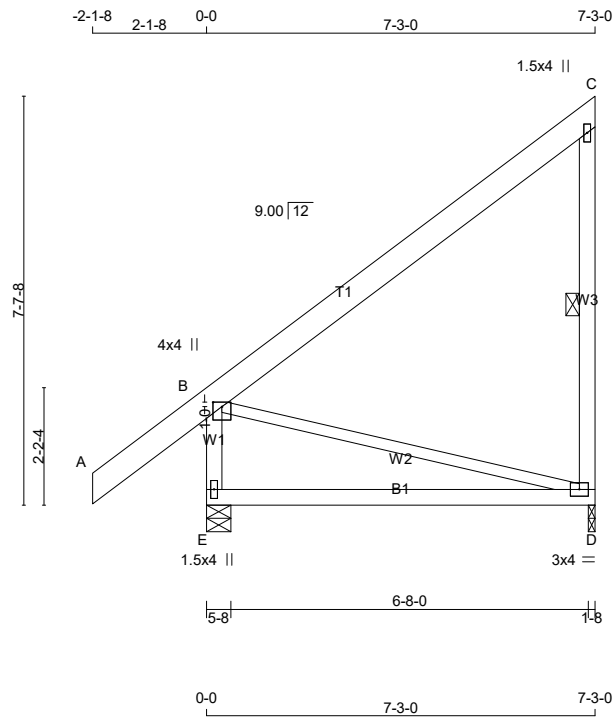

TOTAL WEIGHT = 4 X 45 = 180 lb

[M]

LUMBER

N. L. G. A. RULES

CHORDS	SIZE		LUMBER	DESCR.
A - C	2x6	DRY	1650F 1.5E	SPF
D - C	2x4	DRY	1650F 1.5E	SPF
E - B	2x4	DRY	1650F 1.5E	SPF
E - D	2x4	DRY	1650F 1.5E	SPF
ALL WEBS	2x3	DRY	No.2	SPF

DIMENSIONS, SUPPORTS AND LOADINGS SPECIFIED BY FABRICATOR TO BE VERIFIED BY BUILDING DESIGNER

BEARINGS

	FACTORED GROSS REACTION		MAXIMUM FACTORED GROSS REACTION			INPUT BRG	REQRD BRG
JT	VERT	HORZ	DOWN	HORZ	UPLIFT	IN-SX	IN-SX
D	631	0	631	0	0	1-8	1-8
E	986	0	986	0	0	5-8	1-8

UNFACTORED REACTIONS

	1ST LCASE	MAX./MIN. COMPONENT REACTIONS					
JT	COMBINED	SNOW	LIVE	PERM.LIVE	WIND	DEAD	SOIL
D	435	348 / 0	0 / 0	0 / 0	0 / 0	87 / 0	0 / 0
E	675	566 / 0	0 / 0	0 / 0	0 / 0	110 / 0	0 / 0

BEARING MATERIAL TO BE SPF NO.2 OR BETTER AT JOINT(S) E

BRACING

TOP CHORD TO BE SHEATHED OR MAX. PURLIN SPACING = 10.00 FT.
MAX. UNBRACED BOTTOM CHORD LENGTH = 10.00 FT OR RIGID CEILING DIRECTLY APPLIED.

ALL PITCH BREAKS AND PERIMETER CORNER JOINTS MUST BE LATERALLY RESTRAINED.

1 LATERAL BRACE(S) AT 1/ 2 LENGTH OF C-D.

END VERTICAL(S) MUST BE SHEATHED OR HAVE BRACES AS INDICATED IN
THE MAX. UNBRACED LENGTH COLUMN OF THE TABLE BELOW

DESIGN CRITERIA

SPECIFIED LOADS:

TOP CH.	LL	=	48.1	PSF
	DL	=	5.0	PSF
BOT CH.	LL	=	0.0	PSF
	DL	=	7.0	PSF
TOTAL LOAD		=	60.0	PSF

SPACING = 24.0 IN. C/C

THIS TRUSS IS DESIGNED FOR RESIDENTIAL OR SMALL BUILDING
REQUIREMENTS OF PART 9, NBCC 2015

THIS DESIGN COMPLIES WITH:
- PART 9 OF BCBC 2018 , ABC 2019
- PART 9 OF OBC 2012 (2019 AMENDMENT)
- CSA 086-14
- TPIC 2014

(55 % OF 83.6 P.S.F. G.S.L. PLUS 2.1 P.S.F. RAIN LOAD) EQUALS 48.1
P.S.F. SPECIFIED ROOF LIVE LOAD

ALLOWABLE DEFL.(TL)= L/180 (0.48")
CALCULATED VERT. DEFL.(TL) = L/ 800 (0.11")

CSI: TC=0.48/1.00 (B-C:1) , BC=0.23/1.00 (D-E:4) , WB=0.00/1.00 (B-D:1) ,
SSI=0.27/1.00 (B-C:1)

CONTINUED ON PAGE 2

JOB NAME	TRUSS NAME	QUANTITY	PLY	JOB DESC. Woodcreek / Adkins	DRWG NO.
211770	M4	4	1	TRUSS DESC.	

KAMLOOPS TRUSS LTD., Kamloops, BC V2H 1G3

Version 8.420 S Mar 22 2021 MiTek Industries, Inc. Thu May 27 07:07:22 2021 Page 2

ID:X2qvwXGfFYBXzZFI6ldjmRzCaiR-Td3Gmmng_9o_rCCOcIhsIf?Xi9P24b4iDQarDIzCLVZ

DRY: SEASONED LUMBER.

PLATES (table is in inches)

JT	TYPE	PLATES	W	LEN	Y	X
B	TMVW+p	MT20	4.0	4.0	1.00	2.00
C	TMV+p	MT20	1.5	4.0		
D	BMVW1-t	MT20	3.0	4.0		
E	BMV1+p	MT20	1.5	4.0		

LOADING

TOTAL LOAD CASES: (4)

CHORDS

MEMB. FR-TO	MAX. FORCE (LBS)	FACTORED VERT. LOAD (PLF) FROM	TO	LC1	MAX CSI (LC)	MAX. UNBRAC LENGTH
A- B	0 / 106	-156.6	-156.6	0.19 (1)		10.00
B- C	0 / 0	-156.6	-156.6	0.48 (1)		10.00
D- C	-568 / 0	0.0	0.0	0.10 (1)		6.25
E- B	-922 / 0	0.0	0.0	0.07 (1)		7.81
E- D	0 / 0	-17.5	-17.5	0.23 (4)		10.00

WEBS

MEMB. FR-TO	MAX. FORCE (LBS)	MAX CSI (LC)
B- D	0 / 0	0.00 (1)

DOL LUMBER=1.00 NAIL=1.00 LS BEND=1.10 COMP=1.10 SHEAR=1.10
TENS= 1.10

COMPANION LIVE LOAD FACTOR = 1.00

TRUSS PLATE MANUFACTURER IS NOT RESPONSIBLE FOR QUALITY CONTROL IN THE TRUSS MANUFACTURING PLANT .

NAIL VALUES

PLATE	GRIP(DRY) (PSI) MAX	MIN	SHEAR (PLI) MAX	MIN	SECTION (PLI) MAX	MIN
MT20	650	371	1747	788	1987	1873

PLATE PLACEMENT TOL. = 0.250 inches

PLATE ROTATION TOL. = 5.0 Deg.

JSI GRIP= 0.70 (B) (INPUT = 0.90)
JSI METAL= 0.40 (C) (INPUT = 1.00)

JOB NAME	TRUSS NAME	QUANTITY	PLY	JOB DESC. Woodcreek / Adkins	DRWG NO.
211770	P1	1	1	TRUSS DESC.	

KAMLOOPS TRUSS LTD., Kamloops, BC V2H 1G3

ID:X2qvwXGfFYBXzZFl6ldjmRzCaiR-P?B0BRowWn2i5WLnkjjKN45zEy7eYTX?hk3yIBzCLVX

Scale = 1:14.5

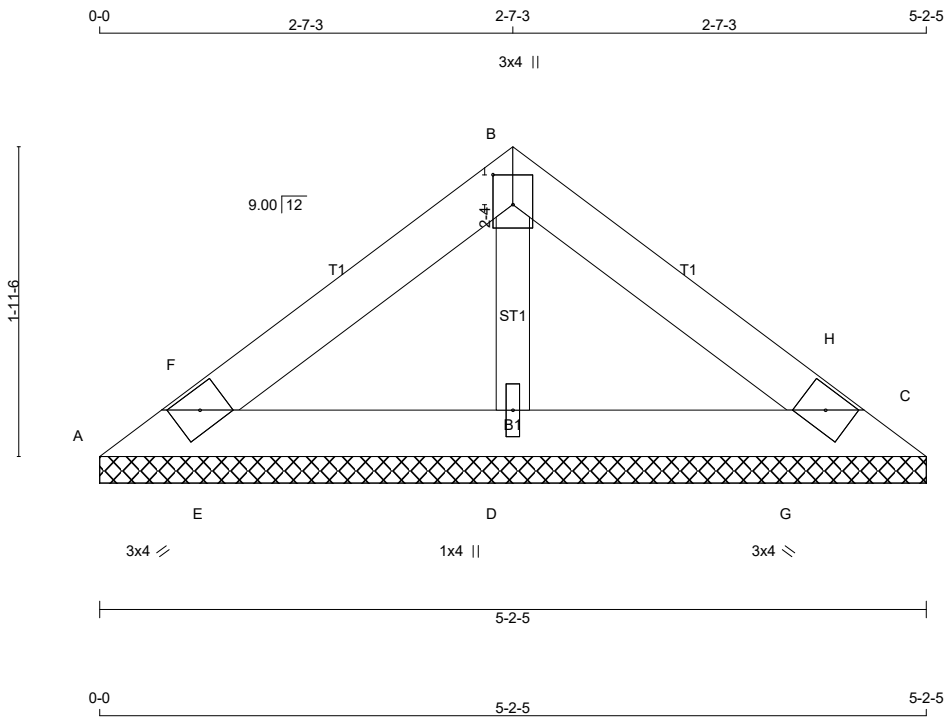

TOTAL WEIGHT = 13 lb

LUMBER

N. L. G. A. RULES

CHORDS	SIZE		LUMBER	DESCR.
A - B	2x4	DRY	1650F 1.5E	SPF
B - C	2x4	DRY	1650F 1.5E	SPF
A - C	2x4	DRY	1650F 1.5E	SPF
ALL WEBS	2x3	DRY	No.2	SPF

DIMENSIONS, SUPPORTS AND LOADINGS SPECIFIED BY FABRICATOR TO BE VERIFIED BY BUILDING DESIGNER

BEARINGS

JT	FACTORED GROSS REACTION VERT	HORZ	MAXIMUM FACTORED GROSS REACTION DOWN	HORZ	UPLIFT	INPUT BRG IN-SX	REQRD BRG IN-SX
A	125	0	125	0	0	5-2-5	1-8
C	125	0	125	0	0	5-2-5	1-8
D	654	0	654	0	0	5-2-5	1-8

UNFACTORED REACTIONS

JT	1ST LCASE COMBINED	MAX./MIN. COMPONENT REACTIONS SNOW	LIVE	PERM.LIVE	WIND	DEAD	SOIL
A	86	70 / 0	0 / 0	0 / 0	0 / 0	16 / 0	0 / 0
C	86	70 / 0	0 / 0	0 / 0	0 / 0	16 / 0	0 / 0
D	451	359 / 0	0 / 0	0 / 0	0 / 0	92 / 0	0 / 0

BEARING MATERIAL TO BE SPF NO.2 OR BETTER AT JOINT(S) A, C, D

BRACING

TOP CHORD TO BE SHEATHED OR MAX. PURLIN SPACING = 10.00 FT.
MAX. UNBRACED BOTTOM CHORD LENGTH = 6.25 FT OR RIGID CEILING DIRECTLY APPLIED.

ALL PITCH BREAKS AND PERIMETER CORNER JOINTS MUST BE LATERALLY RESTRAINED.

[M]

DESIGN CRITERIA

SPECIFIED LOADS:

TOP CH.	LL	=	48.1	PSF
	DL	=	5.0	PSF
BOT CH.	LL	=	0.0	PSF
	DL	=	7.0	PSF
TOTAL LOAD		=	60.0	PSF

SPACING = 24.0 IN. C/C

THIS TRUSS IS DESIGNED FOR RESIDENTIAL OR SMALL BUILDING REQUIREMENTS OF PART 9, NBCC 2015

THIS DESIGN COMPLIES WITH:
- PART 9 OF BCBC 2018 , ABC 2019
- PART 9 OF OBC 2012 (2019 AMENDMENT)
- CSA 086-14
- TPIC 2014

(55 % OF 83.6 P.S.F. G.S.L. PLUS 2.1 P.S.F. RAIN LOAD) EQUALS 48.1 P.S.F. SPECIFIED ROOF LIVE LOAD

CSI: TC=0.09/1.00 (B-H:1) , BC=0.09/1.00 (D-G:1) , WB=0.07/1.00 (B-D:1) , SSI=0.09/1.00 (B-H:1)

DOL LUMBER=1.00 NAIL=1.00 LS BEND=1.10 COMP=1.10 SHEAR=1.10 TENS= 1.10

CONTINUED ON PAGE 2

JOB NAME	TRUSS NAME	QUANTITY	PLY	JOB DESC. Woodcreek / Adkins	DRWG NO.
211770	P1	1	1	TRUSS DESC.	

KAMLOOPS TRUSS LTD., Kamloops, BC V2H 1G3

Version 8.420 S Mar 22 2021 MiTek Industries, Inc. Thu May 27 07:07:24 2021 Page 2

ID:X2qvwXGfFYBXzZFl6IdjmRzCaiR-P?B0BRowWn2i5WLnkjjKN45zEy7eYTX?hk3yIBzCLVX

DRY: SEASONED LUMBER.

PLATES (table is in inches)

JT	TYPE	PLATES	W	LEN	Y	X
A	TBM1-h	MT20	3.0	4.0		
B	TTW+p	MT20	3.0	4.0	2.25	1.50
C	TBM1-h	MT20	3.0	4.0		
D	BMW1+w	MT20	1.0	4.0		

LOADING

TOTAL LOAD CASES: (4)

CHORDS

MEMB. FR-TO	MAX. FORCE (LBS)	FACTORED VERT. LOAD (PLF) FROM	TO	LC1 MAX CSI (LC)	MAX. UNBRAC LENGTH
A- F	0 / 135	-156.6	-156.6	0.03 (1)	10.00
F- B	0 / 145	-156.6	-156.6	0.09 (1)	10.00
B- H	0 / 145	-156.6	-156.6	0.09 (1)	10.00
H- C	0 / 135	-156.6	-156.6	0.03 (1)	10.00
A- E	-139 / 0	-17.5	-17.5	0.09 (1)	6.25
E- D	-117 / 0	-17.5	-17.5	0.09 (1)	6.25
D- G	-117 / 0	-17.5	-17.5	0.09 (1)	6.25
G- C	-139 / 0	-17.5	-17.5	0.09 (1)	6.25

WEBS

MEMB. FR-TO	MAX. FORCE (LBS)	MAX CSI (LC)
D- B	-458 / 0	0.07 (1)
E- F	-186 / 0	0.00 (1)
G- H	-186 / 0	0.00 (1)

COMPANION LIVE LOAD FACTOR = 1.00

TRUSS PLATE MANUFACTURER IS NOT RESPONSIBLE FOR QUALITY CONTROL IN THE TRUSS MANUFACTURING PLANT .

NAIL VALUES

PLATE	GRIP(DRY) (PSI) MAX	MIN	SHEAR (PLI) MAX	MIN	SECTION (PLI) MAX	MIN
MT20	650	371	1747	788	1987	1873

PLATE PLACEMENT TOL. = 0.250 inches

PLATE ROTATION TOL. = 5.0 Deg.

JSI GRIP= 0.46 (D) (INPUT = 0.90)
JSI METAL= 0.19 (D) (INPUT = 1.00)

JOB NAME	TRUSS NAME	QUANTITY	PLY	JOB DESC. Woodcreek / Adkins	DRWG NO.
211770	P2	17	1	TRUSS DESC.	

KAMLOOPS TRUSS LTD., Kamloops, BC V2H 1G3

ID:X2qvwXGfFYBXzZFl6ldjmRzCaiR-LOJnc7qA2OIQKqV9r8loSVAJjmoF0O5I82Y2M3zCLVV

Scale = 1:16.4

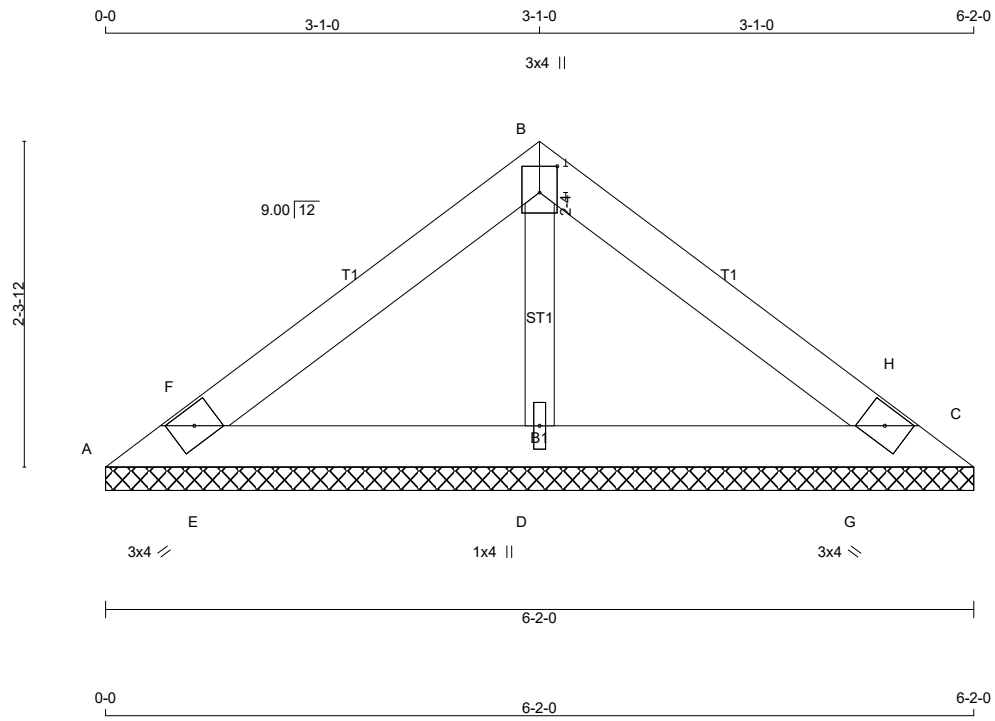

TOTAL WEIGHT = 17 X 16 = 273 lb

[M]

LUMBER

N. L. G. A. RULES

CHORDS	SIZE		LUMBER	DESCR.
A - B	2x4	DRY	1650F 1.5E	SPF
B - C	2x4	DRY	1650F 1.5E	SPF
A - C	2x4	DRY	1650F 1.5E	SPF
ALL WEBS	2x3	DRY	No.2	SPF

DIMENSIONS, SUPPORTS AND LOADINGS SPECIFIED BY FABRICATOR TO BE VERIFIED BY BUILDING DESIGNER

BEARINGS

JT	FACTORED GROSS REACTION VERT	HORZ	MAXIMUM FACTORED GROSS REACTION DOWN	HORZ	UPLIFT	INPUT BRG	REQRD BRG
A	82	0	82	0	0	6-2-0	1-8
C	82	0	82	0	0	6-2-0	1-8
D	552	0	552	0	0	6-2-0	1-8

UNFACTORED REACTIONS

JT	1ST LCASE COMBINED	MAX./MIN. COMPONENT REACTIONS SNOW	LIVE	PERM.LIVE	WIND	DEAD	SOIL
A	56	46 / 0	0 / 0	0 / 0	0 / 0	11 / 0	0 / 0
C	56	46 / 0	0 / 0	0 / 0	0 / 0	11 / 0	0 / 0
D	381	304 / 0	0 / 0	0 / 0	0 / 0	77 / 0	0 / 0

BEARING MATERIAL TO BE SPF NO.2 OR BETTER AT JOINT(S) A, C, D

BRACING

TOP CHORD TO BE SHEATHED OR MAX. PURLIN SPACING = 10.00 FT.
MAX. UNBRACED BOTTOM CHORD LENGTH = 6.25 FT OR RIGID CEILING DIRECTLY APPLIED.

ALL PITCH BREAKS AND PERIMETER CORNER JOINTS MUST BE LATERALLY RESTRAINED.

DESIGN CRITERIA

SPECIFIED LOADS:

TOP CH.	LL	=	48.1	PSF
	DL	=	5.0	PSF
BOT CH.	LL	=	0.0	PSF
	DL	=	7.0	PSF
TOTAL LOAD		=	60.0	PSF

SPACING = 16.0 IN. C/C

THIS TRUSS IS DESIGNED FOR RESIDENTIAL OR SMALL BUILDING REQUIREMENTS OF PART 9, NBCC 2015

THIS DESIGN COMPLIES WITH:
- PART 9 OF BCBC 2018 , ABC 2019
- PART 9 OF OBC 2012 (2019 AMENDMENT)
- CSA 086-14
- TPIC 2014

(55 % OF 83.6 P.S.F. G.S.L. PLUS 2.1 P.S.F. RAIN LOAD) EQUALS 48.1 P.S.F. SPECIFIED ROOF LIVE LOAD

CSI: TC=0.09/1.00 (B-H:1) , BC=0.08/1.00 (D-G:1) , WB=0.06/1.00 (B-D:1) , SSI=0.08/1.00 (B-H:1)

DOL LUMBER=1.00 NAIL=1.00 LS BEND=1.10 COMP=1.10 SHEAR=1.10 TENS= 1.10

CONTINUED ON PAGE 2

JOB NAME	TRUSS NAME	QUANTITY	PLY	JOB DESC. Woodcreek / Adkins	DRWG NO.
211770	P2	17	1	TRUSS DESC.	

KAMLOOPS TRUSS LTD., Kamloops, BC V2H 1G3

Version 8.420 S Mar 22 2021 MiTek Industries, Inc. Thu May 27 07:07:26 2021 Page 2

ID:X2qvwXGfFYBXzZFl6ldjmRzCaiR-LOJnc7qA2OIQKqV9r8loSVAJjmoF0O5I82Y2M3zCLVV

DRY: SEASONED LUMBER.

PLATES (table is in inches)

JT	TYPE	PLATES	W	LEN	Y	X
A	TBM1-h	MT20	3.0	4.0		
B	TTW+p	MT20	3.0	4.0	2.25	1.50
C	TBM1-h	MT20	3.0	4.0		
D	BMW1+w	MT20	1.0	4.0		

LOADING

TOTAL LOAD CASES: (4)

C H O R D S

MEMB. FR-TO	MAX. FORCE (LBS)	FACTORED VERT. LOAD (PLF) FROM	TO	LC1 MAX CSI (LC)	MAX. UNBRAC LENGTH
A- F	0 / 143	-104.4	-104.4	0.03 (1)	10.00
F- B	0 / 146	-104.4	-104.4	0.09 (1)	10.00
B- H	0 / 146	-104.4	-104.4	0.09 (1)	10.00
H- C	0 / 143	-104.4	-104.4	0.03 (1)	10.00
A- E	-140 / 0	-11.7	-11.7	0.08 (1)	6.25
E- D	-120 / 0	-11.7	-11.7	0.08 (1)	6.25
D- G	-120 / 0	-11.7	-11.7	0.08 (1)	6.25
G- C	-140 / 0	-11.7	-11.7	0.08 (1)	6.25

W E B S

MEMB. FR-TO	MAX. FORCE (LBS)	MAX CSI (LC)
D- B	-411 / 0	0.06 (1)
E- F	-157 / 0	0.00 (1)
G- H	-157 / 0	0.00 (1)

COMPANION LIVE LOAD FACTOR = 1.00

TRUSS PLATE MANUFACTURER IS NOT RESPONSIBLE FOR QUALITY CONTROL IN THE TRUSS MANUFACTURING PLANT .

NAIL VALUES

PLATE	GRIP(DRY) (PSI) MAX	MIN	SHEAR (PLI) MAX	MIN	SECTION (PLI) MAX	MIN
MT20	650	371	1747	788	1987	1873

PLATE PLACEMENT TOL. = 0.250 inches

PLATE ROTATION TOL. = 5.0 Deg.

JSI GRIP= 0.41 (D) (INPUT = 0.90)
JSI METAL= 0.17 (D) (INPUT = 1.00)

JOB NAME	TRUSS NAME	QUANTITY	PLY	JOB DESC. Woodcreek / Adkins	DRWG NO.
211770	P3	1	2	TRUSS DESC.	

KAMLOOPS TRUSS LTD., Kamloops, BC V2H 1G3

ID:X2qvwXGfFYBXzZFl6ldjmRzCaiR-HnQX1prRa?Y8Z7fYzZoGXwFeZaV1UIrbcM19RyzCLVT

Scale = 1:16.4

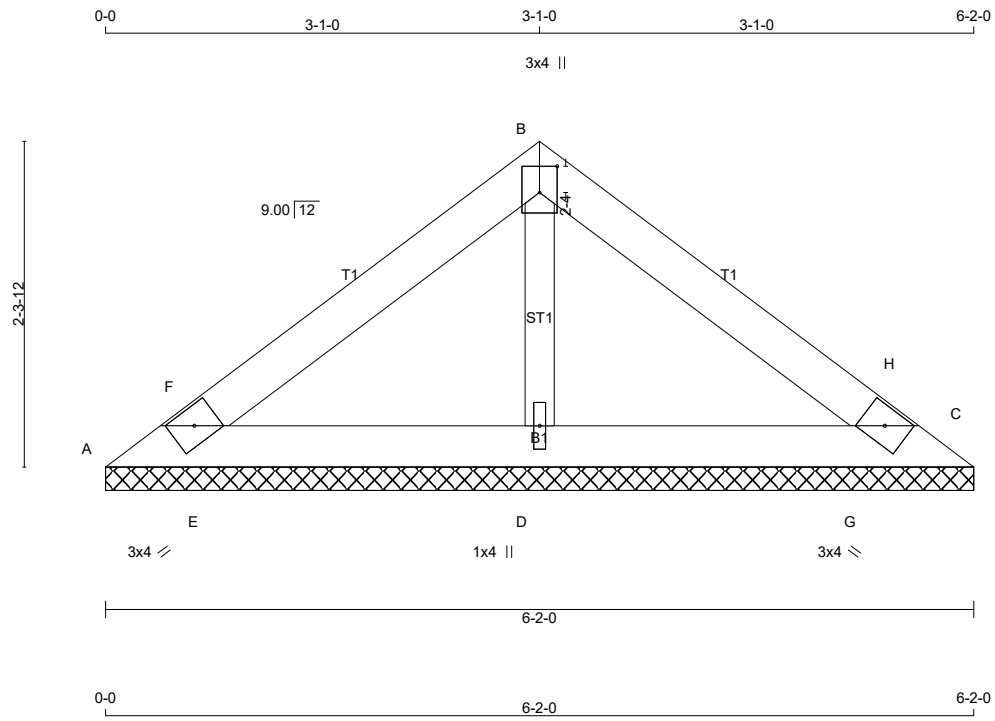

TOTAL WEIGHT = 2 X 16 = 32 lb

[M]

LUMBER

N. L. G. A. RULES

CHORDS	SIZE		LUMBER	DESCR.
A - B	2x4	DRY	1650F 1.5E	SPF
B - C	2x4	DRY	1650F 1.5E	SPF
A - C	2x4	DRY	1650F 1.5E	SPF
ALL WEBS	2x3	DRY	No.2	SPF

DIMENSIONS, SUPPORTS AND LOADINGS SPECIFIED BY FABRICATOR TO BE VERIFIED BY BUILDING DESIGNER

BEARINGS

JT	FACTORED GROSS REACTION VERT	HORZ	MAXIMUM FACTORED GROSS REACTION DOWN	HORZ	UPLIFT	INPUT BRG IN-SX	REQRD BRG IN-SX
A	123	0	123	0	0	6-2-0	1-8
C	123	0	123	0	0	6-2-0	1-8
D	828	0	828	0	0	6-2-0	1-8

UNFACTORED REACTIONS

JT	1ST LCASE COMBINED	MAX./MIN. COMPONENT REACTIONS SNOW	LIVE	PERM.LIVE	WIND	DEAD	SOIL
A	84	69 / 0	0 / 0	0 / 0	0 / 0	16 / 0	0 / 0
C	84	69 / 0	0 / 0	0 / 0	0 / 0	16 / 0	0 / 0
D	572	455 / 0	0 / 0	0 / 0	0 / 0	116 / 0	0 / 0

BEARING MATERIAL TO BE SPF NO.2 OR BETTER AT JOINT(S) A, C, D

BRACING

TOP CHORD TO BE SHEATHED OR MAX. PURLIN SPACING = 10.00 FT.
MAX. UNBRACED BOTTOM CHORD LENGTH = 6.25 FT OR RIGID CEILING DIRECTLY APPLIED.

ALL PITCH BREAKS AND PERIMETER CORNER JOINTS MUST BE LATERALLY RESTRAINED.

DESIGN CRITERIA

SPECIFIED LOADS:

TOP CH.	LL	=	48.1	PSF
	DL	=	5.0	PSF
BOT CH.	LL	=	0.0	PSF
	DL	=	7.0	PSF
TOTAL LOAD		=	60.0	PSF

SPACING = 24.0 IN. C/C

THIS TRUSS IS DESIGNED FOR RESIDENTIAL OR SMALL BUILDING REQUIREMENTS OF PART 9, NBCC 2015

THIS DESIGN COMPLIES WITH:
- PART 9 OF BCBC 2018 , ABC 2019
- PART 9 OF OBC 2012 (2019 AMENDMENT)
- CSA 086-14
- TPIC 2014

(55 % OF 83.6 P.S.F. G.S.L. PLUS 2.1 P.S.F. RAIN LOAD) EQUALS 48.1 P.S.F. SPECIFIED ROOF LIVE LOAD

CSI: TC=0.07/1.00 (B-H:1) , BC=0.06/1.00 (D-G:1) , WB=0.05/1.00 (B-D:1) , SSI=0.06/1.00 (B-F:1)

DOL LUMBER=1.00 NAIL=1.00 LS BEND=1.10 COMP=1.10 SHEAR=1.10 TENS= 1.10

CONTINUED ON PAGE 2

DRY: SEASONED LUMBER.

DESIGN CONSISTS OF 2 TRUSSES BUILT SEPARATELY THEN FASTENED TOGETHER AS FOLLOWS:

CHORDS	#ROWS	SURFACE SPACING (IN)	LOAD(PLF)
TOP CHORDS : (0.122"X3") SPIRAL NAILS			
A- B	1	12	TOP
B- C	1	12	TOP
BOTTOM CHORDS : (0.122"X3") SPIRAL NAILS			
A- C	1	12	TOP
WEBS : (0.122"X3") SPIRAL NAILS			
2x3	1	6	

NAILS TO BE DRIVEN FROM ONE SIDE ONLY.

TOP - COMPONENTS ARE LOADED FROM THE TOP AND MUST BE PLACED ON TOP EDGE OF ALL PLIES FOR THE LOAD TO BE TRANSFERRED TO EACH PLY.

PLATES (table is in inches)

JT	TYPE	PLATES	W	LEN	Y	X
A	TBM1-h	MT20	3.0	4.0		
B	TTW+p	MT20	3.0	4.0	2.25	1.50
C	TBM1-h	MT20	3.0	4.0		
D	BMW1+w	MT20	1.0	4.0		

LOADING

TOTAL LOAD CASES: (4)

CHORDS

MEMB. FR-TO	MAX. FACTORED FORCE (LBS)	FACTORED VERT. LOAD (PLF) FROM	TO	LC1 MAX CSI (LC)	MAX. UNBRAC LENGTH
A- F	0 / 215	-156.6	-156.6	0.02 (1)	10.00
F- B	0 / 220	-156.6	-156.6	0.07 (1)	10.00
B- H	0 / 220	-156.6	-156.6	0.07 (1)	10.00
H- C	0 / 215	-156.6	-156.6	0.02 (1)	10.00
A- E	-210 / 0	-17.5	-17.5	0.06 (1)	6.25
E- D	-180 / 0	-17.5	-17.5	0.06 (1)	6.25
D- G	-180 / 0	-17.5	-17.5	0.06 (1)	6.25
G- C	-210 / 0	-17.5	-17.5	0.06 (1)	6.25

WEBS

MEMB. FR-TO	MAX. FACTORED FORCE (LBS)	MAX CSI (LC)
D- B	-617 / 0	0.05 (1)
E- F	-235 / 0	0.00 (1)
G- H	-235 / 0	0.00 (1)

COMPANION LIVE LOAD FACTOR = 1.00

TRUSS PLATE MANUFACTURER IS NOT RESPONSIBLE FOR QUALITY CONTROL IN THE TRUSS MANUFACTURING PLANT .

NAIL VALUES

PLATE	GRIP(DRY) (PSI) MAX	MIN	SHEAR (PLI) MAX	MIN	SECTION (PLI) MAX	MIN
MT20	650	371	1747	788	1987	1873

PLATE PLACEMENT TOL. = 0.250 inches

PLATE ROTATION TOL. = 5.0 Deg.

JSI GRIP= 0.31 (D) (INPUT = 0.90)
JSI METAL= 0.13 (D) (INPUT = 1.00)

JOB NAME	TRUSS NAME	QUANTITY	PLY	JOB DESC. Woodcreek / Adkins	DRWG NO.
211770	P4	2	1	TRUSS DESC.	

KAMLOOPS TRUSS LTD., Kamloops, BC V2H 1G3

ID:X2qvwXGfFYBXzZFl6ldjmRzCaiR-E9YISVth5dospRpw4_qkcLLzhNAWyBPu3gWGVrzCLVR

Scale = 1:19.8

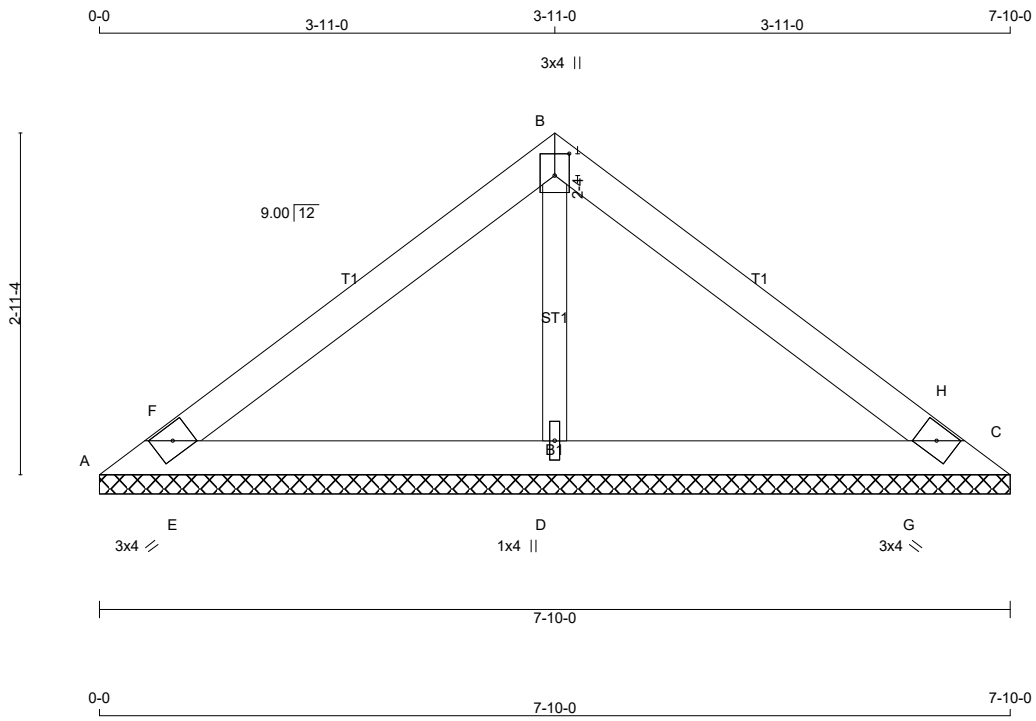

TOTAL WEIGHT = 2 X 21 = 42 lb

[M]

LUMBER

N. L. G. A. RULES

CHORDS	SIZE		LUMBER	DESCR.
A - B	2x4	DRY	1650F 1.5E	SPF
B - C	2x4	DRY	1650F 1.5E	SPF
A - C	2x4	DRY	1650F 1.5E	SPF
ALL WEBS	2x3	DRY	No.2	SPF

DIMENSIONS, SUPPORTS AND LOADINGS SPECIFIED BY FABRICATOR TO BE VERIFIED BY BUILDING DESIGNER

BEARINGS

JT	FACTORED GROSS REACTION VERT	HORZ	MAXIMUM GROSS REACTION DOWN	HORZ	UPLIFT	INPUT BRG IN-SX	REQRD BRG IN-SX
A	66	0	66	0	0	7-10-0	1-8
C	66	0	66	0	0	7-10-0	1-8
D	778	0	778	0	0	7-10-0	1-8

UNFACTORED REACTIONS

JT	1ST LCASE COMBINED	MAX./MIN. COMPONENT REACTIONS SNOW	LIVE	PERM.LIVE	WIND	DEAD	SOIL
A	45	36 / 0	0 / 0	0 / 0	0 / 0	9 / 0	0 / 0
C	45	36 / 0	0 / 0	0 / 0	0 / 0	9 / 0	0 / 0
D	537	429 / 0	0 / 0	0 / 0	0 / 0	108 / 0	0 / 0

BEARING MATERIAL TO BE SPF NO.2 OR BETTER AT JOINT(S) A, C, D

BRACING

TOP CHORD TO BE SHEATHED OR MAX. PURLIN SPACING = 10.00 FT.
MAX. UNBRACED BOTTOM CHORD LENGTH = 6.25 FT OR RIGID CEILING DIRECTLY APPLIED.

ALL PITCH BREAKS AND PERIMETER CORNER JOINTS MUST BE LATERALLY RESTRAINED.

DESIGN CRITERIA

SPECIFIED LOADS:

TOP CH.	LL	=	48.1	PSF
	DL	=	5.0	PSF
BOT CH.	LL	=	0.0	PSF
	DL	=	7.0	PSF
TOTAL LOAD		=	60.0	PSF

SPACING = 16.0 IN. C/C

THIS TRUSS IS DESIGNED FOR RESIDENTIAL OR SMALL BUILDING REQUIREMENTS OF PART 9, NBCC 2015

THIS DESIGN COMPLIES WITH:
- PART 9 OF BCBC 2018 , ABC 2019
- PART 9 OF OBC 2012 (2019 AMENDMENT)
- CSA 086-14
- TPIC 2014

(55 % OF 83.6 P.S.F. G.S.L. PLUS 2.1 P.S.F. RAIN LOAD) EQUALS 48.1 P.S.F. SPECIFIED ROOF LIVE LOAD

CSI: TC=0.16/1.00 (B-H:1) , BC=0.12/1.00 (D-G:1) , WB=0.11/1.00 (B-D:1) , SSI=0.11/1.00 (C-G:1)

DOL LUMBER=1.00 NAIL=1.00 LS BEND=1.10 COMP=1.10 SHEAR=1.10 TENS= 1.10

CONTINUED ON PAGE 2

JOB NAME	TRUSS NAME	QUANTITY	PLY	JOB DESC. Woodcreek / Adkins	DRWG NO.
211770	P4	2	1	TRUSS DESC.	

KAMLOOPS TRUSS LTD., Kamloops, BC V2H 1G3

Version 8.420 S Mar 22 2021 MiTek Industries, Inc. Thu May 27 07:07:30 2021 Page 2

ID:X2qvwXGfFYBXzZFl6ldjmRzCaiR-E9YISVth5dospRpw4_qkcLLzhNAWyBPu3gWGVrzCLVR

DRY: SEASONED LUMBER.

PLATES (table is in inches)

JT	TYPE	PLATES	W	LEN	Y	X
A	TBM1-h	MT20	3.0	4.0		
B	TTW+p	MT20	3.0	4.0	2.25	1.50
C	TBM1-h	MT20	3.0	4.0		
D	BMW1+w	MT20	1.0	4.0		

LOADING

TOTAL LOAD CASES: (4)

CHORDS

MEMB. FR-TO	MAX. FORCE (LBS)	FACTORED VERT. LOAD (PLF) FROM	TO	LC1	MAX CSI (LC)	MAX. UNBRAC LENGTH
A- F	0 / 259	-104.4	-104.4	0.08 (1)	10.00	
F- B	0 / 252	-104.4	-104.4	0.16 (1)	10.00	
B- H	0 / 252	-104.4	-104.4	0.16 (1)	10.00	
H- C	0 / 259	-104.4	-104.4	0.08 (1)	10.00	
A- E	-240 / 0	-11.7	-11.7	0.12 (1)	6.25	
E- D	-208 / 0	-11.7	-11.7	0.12 (1)	6.25	
D- G	-208 / 0	-11.7	-11.7	0.12 (1)	6.25	
G- C	-240 / 0	-11.7	-11.7	0.12 (1)	6.25	

WEBS

MEMB. FR-TO	MAX. FORCE (LBS)	MAX CSI (LC)
D- B	-616 / 0	0.11 (1)
E- F	-224 / 0	0.00 (1)
G- H	-224 / 0	0.00 (1)

COMPANION LIVE LOAD FACTOR = 1.00

TRUSS PLATE MANUFACTURER IS NOT RESPONSIBLE FOR QUALITY CONTROL IN THE TRUSS MANUFACTURING PLANT .

NAIL VALUES

PLATE	GRIP(DRY) (PSI) MAX	MIN	SHEAR (PLI) MAX	MIN	SECTION (PLI) MAX	MIN
MT20	650	371	1747	788	1987	1873

PLATE PLACEMENT TOL. = 0.250 inches

PLATE ROTATION TOL. = 5.0 Deg.

JSI GRIP= 0.61 (D) (INPUT = 0.90)
JSI METAL= 0.26 (D) (INPUT = 1.00)

JOB NAME	TRUSS NAME	QUANTITY	PLY	JOB DESC. Woodcreek / Adkins	DRWG NO.
211770	P5	1	1	TRUSS DESC.	

KAMLOOPS TRUSS LTD., Kamloops, BC V2H 1G3

ID:X2qvwXGfFYBXzZFl6ldjmRzCaiR-iM6gfruJswwiQbO7ehLz9Zt9cnX9hfY1IKGp2HzCLVQ

Scale = 1:19.8

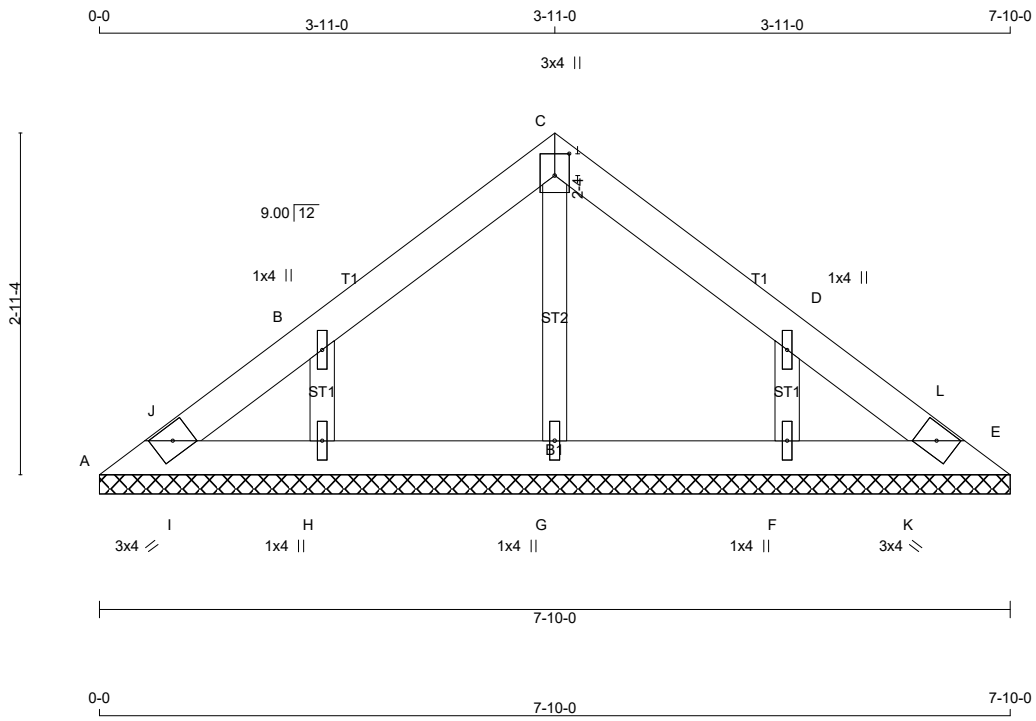

TOTAL WEIGHT = 22 lb [M]

LUMBER

N. L. G. A. RULES

CHORDS	SIZE		LUMBER	DESCR.
A - C	2x4	DRY	1650F 1.5E	SPF
C - E	2x4	DRY	1650F 1.5E	SPF
A - E	2x4	DRY	1650F 1.5E	SPF
ALL WEBS	2x3	DRY	No.2	SPF

DIMENSIONS, SUPPORTS AND LOADINGS SPECIFIED BY FABRICATOR TO BE VERIFIED BY BUILDING DESIGNER

BEARINGS

JT	FACTORED GROSS REACTION VERT	HORZ	MAXIMUM FACTORED GROSS REACTION DOWN	HORZ	UPLIFT	INPUT BRG IN-SX	REQRD BRG IN-SX
A	138	0	138	0	0	7-10-0	1-8
E	138	0	138	0	0	7-10-0	1-8
G	257	0	257	0	0	7-10-0	1-8
H	415	0	415	0	0	7-10-0	1-8
F	415	0	415	0	0	7-10-0	1-8

UNFACTORED REACTIONS

JT	1ST LCASE COMBINED	MAX./MIN. COMPONENT REACTIONS SNOW	LIVE	PERM.LIVE	WIND	DEAD	SOIL
A	95	78 / 0	0 / 0	0 / 0	0 / 0	17 / 0	0 / 0
E	95	78 / 0	0 / 0	0 / 0	0 / 0	17 / 0	0 / 0
G	179	134 / 0	0 / 0	0 / 0	0 / 0	45 / 0	0 / 0
H	286	232 / 0	0 / 0	0 / 0	0 / 0	54 / 0	0 / 0
F	286	232 / 0	0 / 0	0 / 0	0 / 0	54 / 0	0 / 0

BEARING MATERIAL TO BE SPF NO.2 OR BETTER AT JOINT(S) A, E, G, H, F

BRACING

TOP CHORD TO BE SHEATHED OR MAX. PURLIN SPACING = 6.25 FT.
MAX. UNBRACED BOTTOM CHORD LENGTH = 10.00 FT OR RIGID CEILING DIRECTLY APPLIED.

ALL PITCH BREAKS AND PERIMETER CORNER JOINTS MUST BE LATERALLY RESTRAINED.

DESIGN CRITERIA

SPECIFIED LOADS:

TOP CH.	LL	=	48.1	PSF
	DL	=	5.0	PSF
BOT CH.	LL	=	0.0	PSF
	DL	=	7.0	PSF
TOTAL LOAD		=	60.0	PSF

SPACING = 24.0 IN. C/C

THIS TRUSS IS DESIGNED FOR RESIDENTIAL OR SMALL BUILDING REQUIREMENTS OF PART 9, NBCC 2015

THIS DESIGN COMPLIES WITH:
- PART 9 OF BCBC 2018 , ABC 2019
- PART 9 OF OBC 2012 (2019 AMENDMENT)
- CSA 086-14
- TPIC 2014

(55 % OF 83.6 P.S.F. G.S.L. PLUS 2.1 P.S.F. RAIN LOAD) EQUALS 48.1 P.S.F. SPECIFIED ROOF LIVE LOAD

CSI: TC=0.08/1.00 (C-D:1) , BC=0.03/1.00 (F-K:1) , WB=0.05/1.00 (B-H:1) , SSI=0.12/1.00 (C-D:1)

DOL LUMBER=1.00 NAIL=1.00 LS BEND=1.10 COMP=1.10 SHEAR=1.10 TENS= 1.10

CONTINUED ON PAGE 2

JOB NAME	TRUSS NAME	QUANTITY	PLY	JOB DESC. Woodcreek / Adkins	DRWG NO.
211770	P5	1	1	TRUSS DESC.	

KAMLOOPS TRUSS LTD., Kamloops, BC V2H 1G3

ID:X2qvwXGfFYBXzZFl6ldjmRzCaiR-iM6gfruJswwiQbO7ehLz9Zt9cnX9hfY1IKGp2HzCLVQ

DRY: SEASONED LUMBER.

PLATES (table is in inches)

JT	TYPE	PLATES	W	LEN	Y	X
A	TBM1-h	MT20	3.0	4.0		
B	TMW+w	MT20	1.0	4.0		
C	TTW+p	MT20	3.0	4.0	2.25	1.50
D	TMW+w	MT20	1.0	4.0		
E	TBM1-h	MT20	3.0	4.0		
F, G, H						
F	BMW1+w	MT20	1.0	4.0		

LOADING

TOTAL LOAD CASES: (4)

C H O R D S

MEMB. FR-TO	MAX. FACTORED FORCE (LBS)	FACTORED VERT. LOAD (PLF) FROM	TO	LC1 MAX CSI (LC)	MAX. UNBRAC LENGTH
A- J	-59 / 0	-156.6	-156.6	0.03 (1)	6.25
J- B	-4 / 5	-156.6	-156.6	0.08 (1)	10.00
B- C	-38 / 0	-156.6	-156.6	0.08 (1)	6.25
C- D	-38 / 0	-156.6	-156.6	0.08 (1)	6.25
D- L	-4 / 5	-156.6	-156.6	0.08 (1)	10.00
L- E	-59 / 0	-156.6	-156.6	0.03 (1)	6.25
A- I	0 / 37	-17.5	-17.5	0.03 (1)	10.00
I- H	0 / 43	-17.5	-17.5	0.03 (1)	10.00
H- G	-2 / 14	-17.5	-17.5	0.02 (1)	10.00
G- F	-2 / 14	-17.5	-17.5	0.02 (1)	10.00
F- K	0 / 43	-17.5	-17.5	0.03 (1)	10.00
K- E	0 / 37	-17.5	-17.5	0.03 (1)	10.00

W E B S

MEMB. FR-TO	MAX. FACTORED FORCE (LBS)	MAX CSI (LC)
G- C	-239 / 0	0.04 (1)
H- B	-344 / 0	0.05 (1)
F- D	-344 / 0	0.05 (1)
I- J	-45 / 3	0.00 (1)
K- L	-45 / 3	0.00 (1)

COMPANION LIVE LOAD FACTOR = 1.00

TRUSS PLATE MANUFACTURER IS NOT RESPONSIBLE FOR QUALITY CONTROL IN THE TRUSS MANUFACTURING PLANT .

NAIL VALUES

PLATE	GRIP(DRY) (PSI) MAX	MIN	SHEAR (PLI) MAX	MIN	SECTION (PLI) MAX	MIN
MT20	650	371	1747	788	1987	1873

PLATE PLACEMENT TOL. = 0.250 inches

PLATE ROTATION TOL. = 5.0 Deg.

JSI GRIP= 0.45 (B) (INPUT = 0.90)
JSI METAL= 0.36 (B) (INPUT = 1.00)

JOB NAME	TRUSS NAME	QUANTITY	PLY	JOB DESC. Woodcreek / Adkins	DRWG NO.
211770	P6	1	1	TRUSS DESC.	

KAMLOOPS TRUSS LTD., Kamloops, BC V2H 1G3

ID:X2qvwXGfFYBXzZFl6ldjmRzCaiR-ekEQ4WvZOYAQgvXVm6NRE_zUwbBD9Y9KIelw69zCLVO

Scale = 1:19.8

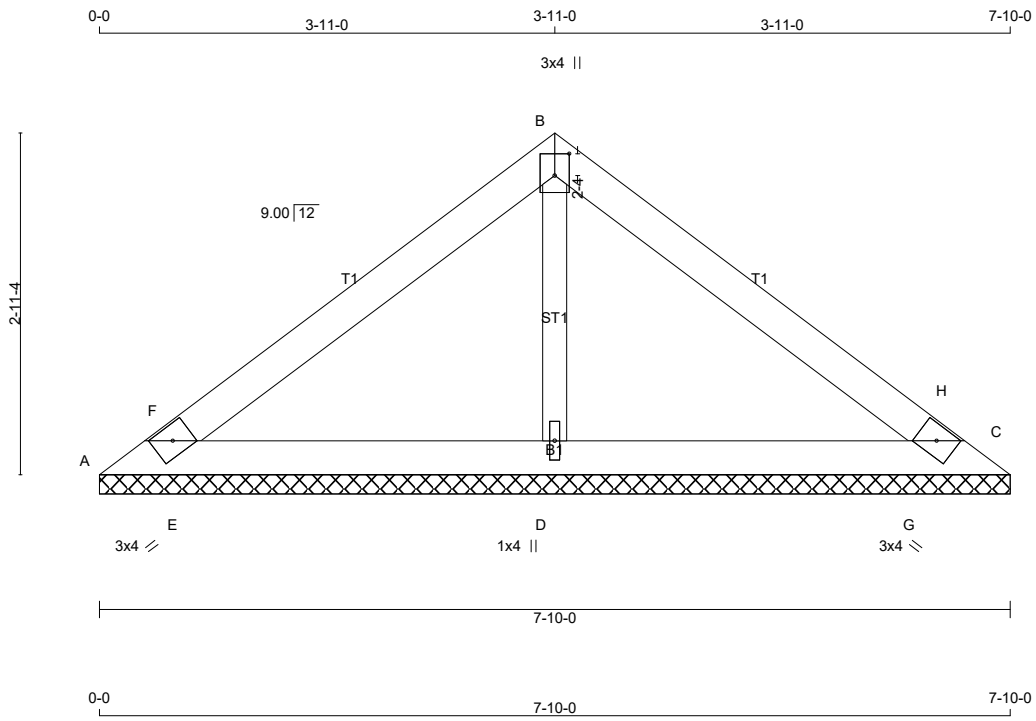

TOTAL WEIGHT = 21 lb [M]

LUMBER

N. L. G. A. RULES

CHORDS	SIZE		LUMBER	DESCR.
A - B	2x4	DRY	1650F 1.5E	SPF
B - C	2x4	DRY	1650F 1.5E	SPF
A - C	2x4	DRY	1650F 1.5E	SPF
ALL WEBS	2x3	DRY	No.2	SPF

DIMENSIONS, SUPPORTS AND LOADINGS SPECIFIED BY FABRICATOR TO BE VERIFIED BY BUILDING DESIGNER

BEARINGS

JT	FACTORED GROSS REACTION VERT	HORZ	MAXIMUM FACTORED GROSS REACTION DOWN	HORZ	UPLIFT	INPUT BRG IN-SX	REQRD BRG IN-SX
A	66	0	66	0	0	7-10-0	1-8
C	66	0	66	0	0	7-10-0	1-8
D	778	0	778	0	0	7-10-0	1-8

UNFACTORED REACTIONS

JT	1ST LCASE COMBINED	MAX./MIN. COMPONENT REACTIONS SNOW	LIVE	PERM.LIVE	WIND	DEAD	SOIL
A	45	36 / 0	0 / 0	0 / 0	0 / 0	9 / 0	0 / 0
C	45	36 / 0	0 / 0	0 / 0	0 / 0	9 / 0	0 / 0
D	537	429 / 0	0 / 0	0 / 0	0 / 0	108 / 0	0 / 0

BEARING MATERIAL TO BE SPF NO.2 OR BETTER AT JOINT(S) A, C, D

BRACING

TOP CHORD TO BE SHEATHED OR MAX. PURLIN SPACING = 10.00 FT.
MAX. UNBRACED BOTTOM CHORD LENGTH = 6.25 FT OR RIGID CEILING DIRECTLY APPLIED.

ALL PITCH BREAKS AND PERIMETER CORNER JOINTS MUST BE LATERALLY RESTRAINED.

DESIGN CRITERIA

SPECIFIED LOADS:

TOP CH.	LL	=	48.1	PSF
	DL	=	5.0	PSF
BOT CH.	LL	=	0.0	PSF
	DL	=	7.0	PSF
TOTAL LOAD		=	60.0	PSF

SPACING = 16.0 IN. C/C

THIS TRUSS IS DESIGNED FOR RESIDENTIAL OR SMALL BUILDING REQUIREMENTS OF PART 9, NBCC 2015

THIS DESIGN COMPLIES WITH:
- PART 9 OF BCBC 2018 , ABC 2019
- PART 9 OF OBC 2012 (2019 AMENDMENT)
- CSA 086-14
- TPIC 2014

(55 % OF 83.6 P.S.F. G.S.L. PLUS 2.1 P.S.F. RAIN LOAD) EQUALS 48.1 P.S.F. SPECIFIED ROOF LIVE LOAD

CSI: TC=0.16/1.00 (B-H:1) , BC=0.12/1.00 (D-G:1) , WB=0.11/1.00 (B-D:1) , SSI=0.11/1.00 (C-G:1)

DOL LUMBER=1.00 NAIL=1.00 LS BEND=1.10 COMP=1.10 SHEAR=1.10 TENS= 1.10

CONTINUED ON PAGE 2

JOB NAME	TRUSS NAME	QUANTITY	PLY	JOB DESC. Woodcreek / Adkins	DRWG NO.
211770	P6	1	1	TRUSS DESC.	

KAMLOOPS TRUSS LTD., Kamloops, BC V2H 1G3

ID:X2qvwXGfFYBXzZFl6ldjmRzCaiR-ekEQ4WvZOYAQgvXVm6NRE_zUwbBD9Y9KIelw69zCLVO

DRY: SEASONED LUMBER.

PLATES (table is in inches)

JT	TYPE	PLATES	W	LEN	Y	X
A	TBM1-h	MT20	3.0	4.0		
B	TTW+p	MT20	3.0	4.0	2.25	1.50
C	TBM1-h	MT20	3.0	4.0		
D	BMW1+w	MT20	1.0	4.0		

LOADING

TOTAL LOAD CASES: (4)

C H O R D S

MEMB. FR-TO	MAX. FACTORED FORCE (LBS)	FACTORED VERT. LOAD LC1 (PLF) FROM	TO	MAX CSI (LC)	MAX. UNBRAC LENGTH
A- F	0 / 259	-104.4	-104.4	0.08 (1)	10.00
F- B	0 / 252	-104.4	-104.4	0.16 (1)	10.00
B- H	0 / 252	-104.4	-104.4	0.16 (1)	10.00
H- C	0 / 259	-104.4	-104.4	0.08 (1)	10.00
A- E	-240 / 0	-11.7	-11.7	0.12 (1)	6.25
E- D	-208 / 0	-11.7	-11.7	0.12 (1)	6.25
D- G	-208 / 0	-11.7	-11.7	0.12 (1)	6.25
G- C	-240 / 0	-11.7	-11.7	0.12 (1)	6.25

W E B S

MEMB. FR-TO	MAX. FACTORED FORCE (LBS)	MAX CSI (LC)
D- B	-616 / 0	0.11 (1)
E- F	-224 / 0	0.00 (1)
G- H	-224 / 0	0.00 (1)

COMPANION LIVE LOAD FACTOR = 1.00

TRUSS PLATE MANUFACTURER IS NOT RESPONSIBLE FOR QUALITY CONTROL IN THE TRUSS MANUFACTURING PLANT .

NAIL VALUES

PLATE	GRIP(DRY) (PSI) MAX	MIN	SHEAR (PLI) MAX	MIN	SECTION (PLI) MAX	MIN
MT20	650	371	1747	788	1987	1873

PLATE PLACEMENT TOL. = 0.250 inches

PLATE ROTATION TOL. = 5.0 Deg.

JSI GRIP= 0.61 (D) (INPUT = 0.90)
JSI METAL= 0.26 (D) (INPUT = 1.00)

JOB NAME	TRUSS NAME	QUANTITY	PLY	JOB DESC. Woodcreek / Adkins	DRWG NO.
211770	P7	5	1	TRUSS DESC.	

KAMLOOPS TRUSS LTD., Kamloops, BC V2H 1G3

Version 8.420 S Mar 22 2021 MiTek Industries, Inc. Thu May 27 07:07:35 2021 Page 1

ID:X2qvwXGfFYBXzZFl6ldjmRzCaiR-a7LBVCxqw9R8vChutXQvJP2pCOswdRedDyE1B2zCLVM

Scale = 1:23.3

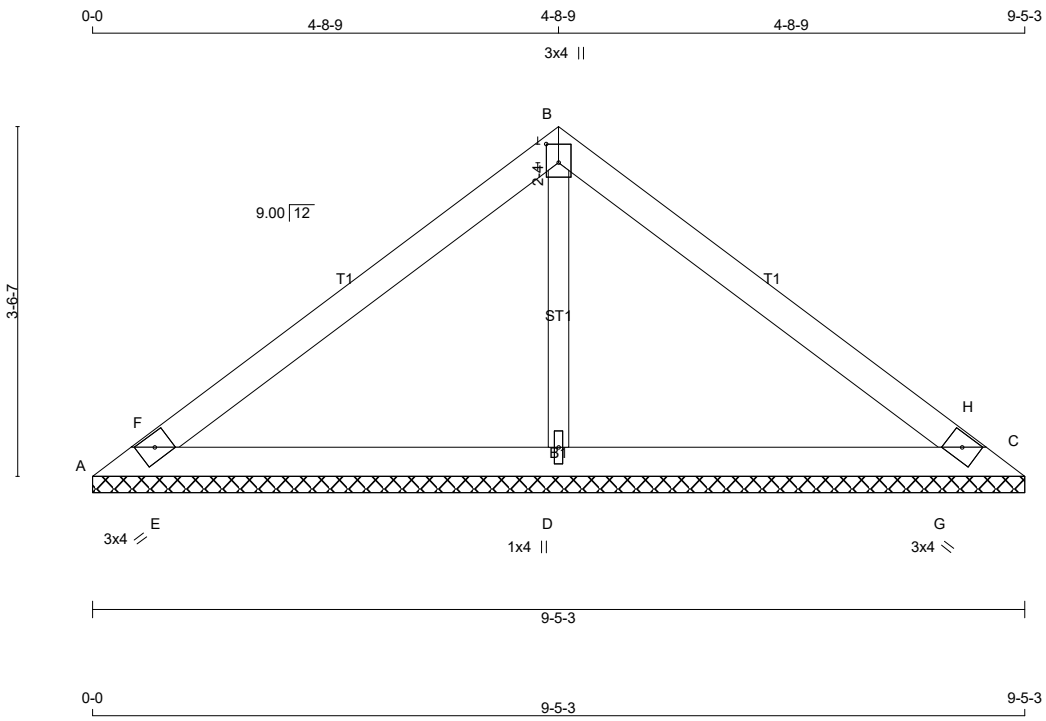

TOTAL WEIGHT = 5 X 25 = 127 lb

[M]

LUMBER

N. L. G. A. RULES

CHORDS	SIZE		LUMBER	DESCR.
A - B	2x4	DRY	1650F 1.5E	SPF
B - C	2x4	DRY	1650F 1.5E	SPF
A - C	2x4	DRY	1650F 1.5E	SPF
ALL WEBS	2x3	DRY	No.2	SPF

DIMENSIONS, SUPPORTS AND LOADINGS SPECIFIED BY FABRICATOR TO BE VERIFIED BY BUILDING DESIGNER

BEARINGS

	FACTORED GROSS REACTION		MAXIMUM FACTORED GROSS REACTION			INPUT BRG	REQRD BRG
JT	VERT	HORZ	DOWN	HORZ	UPLIFT	IN-SX	IN-SX
A	35	0	35	0	0	9-5-3	1-8
C	35	0	35	0	0	9-5-3	1-8
D	1025	0	1025	0	0	9-5-3	1-8

UNFACTORED REACTIONS

	1ST LCASE	MAX./MIN. COMPONENT REACTIONS					
JT	COMBINED	SNOW	LIVE	PERM.LIVE	WIND	DEAD	SOIL
A	24	19 / 0	0 / 0	0 / 0	0 / 0	5 / 0	0 / 0
C	24	19 / 0	0 / 0	0 / 0	0 / 0	5 / 0	0 / 0
D	707	566 / 0	0 / 0	0 / 0	0 / 0	140 / 0	0 / 0

BEARING MATERIAL TO BE SPF NO.2 OR BETTER AT JOINT(S) A, C, D

BRACING

TOP CHORD TO BE SHEATHED OR MAX. PURLIN SPACING = 10.00 FT.
MAX. UNBRACED BOTTOM CHORD LENGTH = 6.25 FT OR RIGID CEILING DIRECTLY APPLIED.

ALL PITCH BREAKS AND PERIMETER CORNER JOINTS MUST BE LATERALLY RESTRAINED.

DESIGN CRITERIA

SPECIFIED LOADS:

TOP CH.	LL	=	48.1	PSF
	DL	=	5.0	PSF
BOT CH.	LL	=	0.0	PSF
	DL	=	7.0	PSF
TOTAL LOAD		=	60.0	PSF

SPACING = 16.0 IN. C/C

THIS TRUSS IS DESIGNED FOR RESIDENTIAL OR SMALL BUILDING REQUIREMENTS OF PART 9, NBCC 2015

THIS DESIGN COMPLIES WITH:
- PART 9 OF BCBC 2018 , ABC 2019
- PART 9 OF OBC 2012 (2019 AMENDMENT)
- CSA 086-14
- TPIC 2014

(55 % OF 83.6 P.S.F. G.S.L. PLUS 2.1 P.S.F. RAIN LOAD) EQUALS 48.1 P.S.F. SPECIFIED ROOF LIVE LOAD

CSI: TC=0.23/1.00 (B-H:1) , BC=0.17/1.00 (D-G:1) , WB=0.17/1.00 (B-D:1) , SSI=0.16/1.00 (C-G:1)

DOL LUMBER=1.00 NAIL=1.00 LS BEND=1.10 COMP=1.10 SHEAR=1.10 TENS= 1.10

CONTINUED ON PAGE 2

JOB NAME	TRUSS NAME	QUANTITY	PLY	JOB DESC. Woodcreek / Adkins	DRWG NO.
211770	P7	5	1	TRUSS DESC.	

KAMLOOPS TRUSS LTD., Kamloops, BC V2H 1G3

Version 8.420 S Mar 22 2021 MiTek Industries, Inc. Thu May 27 07:07:35 2021 Page 2

ID:X2qvwXGfFYBXzZFl6ldjmRzCaiR-a7LBVCxqw9R8vChutXQvJP2pCOswdRedDyE1B2zCLVM

DRY: SEASONED LUMBER.

PLATES (table is in inches)

JT	TYPE	PLATES	W	LEN	Y	X
A	TBM1-h	MT20	3.0	4.0		
B	TTW+p	MT20	3.0	4.0	2.25	1.50
C	TBM1-h	MT20	3.0	4.0		
D	BMW1+w	MT20	1.0	4.0		

LOADING

TOTAL LOAD CASES: (4)

C H O R D S

MEMB. FR-TO	MAX. FACTORED FORCE (LBS)	FACTORED VERT. LOAD LC1 (PLF) FROM	TO	MAX CSI (LC)	MAX. UNBRAC LENGTH
A- F	0 / 401	-104.4	-104.4	0.14 (1)	10.00
F- B	0 / 379	-104.4	-104.4	0.23 (1)	10.00
B- H	0 / 379	-104.4	-104.4	0.23 (1)	10.00
H- C	0 / 401	-104.4	-104.4	0.14 (1)	10.00
A- E	-357 / 0	-11.7	-11.7	0.17 (1)	6.25
E- D	-313 / 0	-11.7	-11.7	0.17 (1)	6.25
D- G	-313 / 0	-11.7	-11.7	0.17 (1)	6.25
G- C	-357 / 0	-11.7	-11.7	0.17 (1)	6.25

W E B S

MEMB. FR-TO	MAX. FACTORED FORCE (LBS)	MAX CSI (LC)
D- B	-842 / 0	0.17 (1)
E- F	-301 / 0	0.00 (1)
G- H	-301 / 0	0.00 (1)

COMPANION LIVE LOAD FACTOR = 1.00

TRUSS PLATE MANUFACTURER IS NOT RESPONSIBLE FOR QUALITY CONTROL IN THE TRUSS MANUFACTURING PLANT .

NAIL VALUES

PLATE	GRIP(DRY) (PSI) MAX	MIN	SHEAR (PLI) MAX	MIN	SECTION (PLI) MAX	MIN
MT20	650	371	1747	788	1987	1873

PLATE PLACEMENT TOL. = 0.250 inches

PLATE ROTATION TOL. = 5.0 Deg.

JSI GRIP= 0.84 (D) (INPUT = 0.90)
JSI METAL= 0.35 (D) (INPUT = 1.00)

JOB NAME	TRUSS NAME	QUANTITY	PLY	JOB DESC. Woodcreek / Adkins	DRWG NO.
211770	P8	1	1	TRUSS DESC.	

KAMLOOPS TRUSS LTD., Kamloops, BC V2H 1G3

ID:X2qvwXGfFYBXzZFl6ldjmRzCaiR-2JvZiYyShTZ?XMG4RFx8scb0toDoMwYmRczajUzCLVL

Scale = 1:23.3

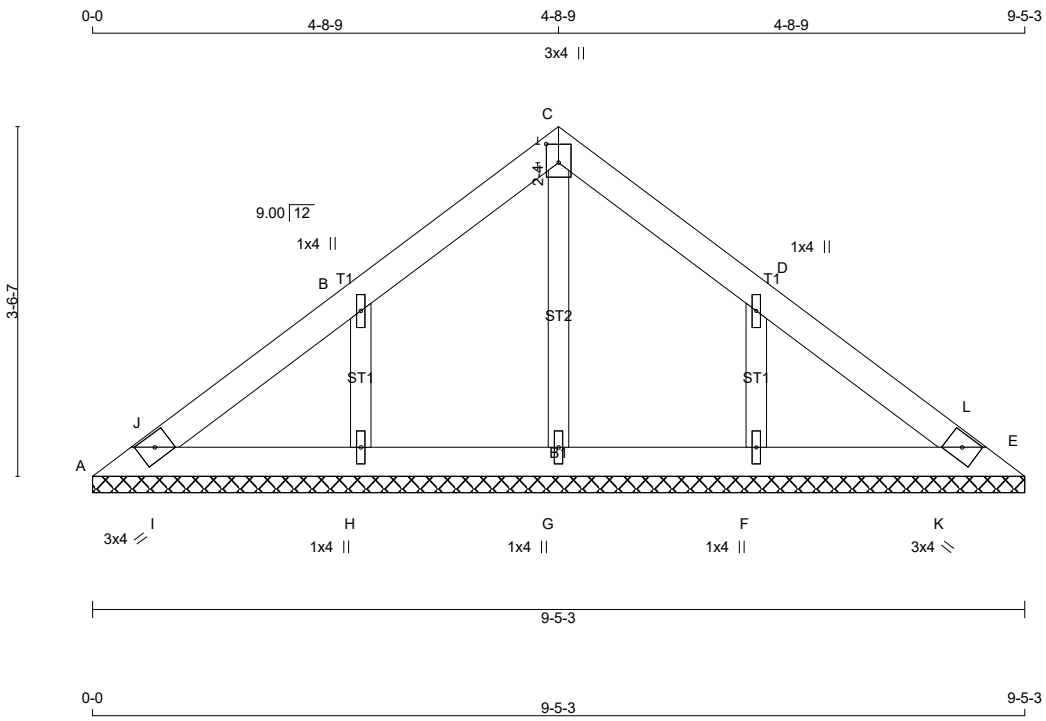

TOTAL WEIGHT = 28 lb

LUMBER

N. L. G. A. RULES

CHORDS	SIZE		LUMBER	DESCR.
A - C	2x4	DRY	1650F 1.5E	SPF
C - E	2x4	DRY	1650F 1.5E	SPF
A - E	2x4	DRY	1650F 1.5E	SPF
ALL WEBS	2x3	DRY	No.2	SPF

DIMENSIONS, SUPPORTS AND LOADINGS SPECIFIED BY FABRICATOR TO BE VERIFIED BY BUILDING DESIGNER

BEARINGS

	FACTORED GROSS REACTION		MAXIMUM FACTORED GROSS REACTION			INPUT BRG	REQRD BRG
JT	VERT	HORZ	DOWN	HORZ	UPLIFT	IN-SX	IN-SX
A	167	0	167	0	0	9-5-3	1-8
E	167	0	167	0	0	9-5-3	1-8
G	301	0	301	0	0	9-5-3	1-8
H	504	0	504	0	0	9-5-3	1-8
F	504	0	504	0	0	9-5-3	1-8

UNFACTORED REACTIONS

	1ST LCASE	MAX./MIN. COMPONENT REACTIONS					
JT	COMBINED	SNOW	LIVE	PERM.LIVE	WIND	DEAD	SOIL
A	115	94 / 0	0 / 0	0 / 0	0 / 0	21 / 0	0 / 0
E	115	94 / 0	0 / 0	0 / 0	0 / 0	21 / 0	0 / 0
G	209	159 / 0	0 / 0	0 / 0	0 / 0	50 / 0	0 / 0
H	347	280 / 0	0 / 0	0 / 0	0 / 0	67 / 0	0 / 0
F	347	280 / 0	0 / 0	0 / 0	0 / 0	67 / 0	0 / 0

BEARING MATERIAL TO BE SPF NO.2 OR BETTER AT JOINT(S) A, E, G, H, F

BRACING

TOP CHORD TO BE SHEATHED OR MAX. PURLIN SPACING = 10.00 FT.
MAX. UNBRACED BOTTOM CHORD LENGTH = 6.25 FT OR RIGID CEILING DIRECTLY APPLIED.

ALL PITCH BREAKS AND PERIMETER CORNER JOINTS MUST BE LATERALLY RESTRAINED.

[M]

DESIGN CRITERIA

SPECIFIED LOADS:

TOP CH.	LL	=	48.1	PSF
	DL	=	5.0	PSF
BOT CH.	LL	=	0.0	PSF
	DL	=	7.0	PSF
TOTAL LOAD		=	60.0	PSF

SPACING = 24.0 IN. C/C

THIS TRUSS IS DESIGNED FOR RESIDENTIAL OR SMALL BUILDING REQUIREMENTS OF PART 9, NBCC 2015

THIS DESIGN COMPLIES WITH:
- PART 9 OF BCBC 2018 , ABC 2019
- PART 9 OF OBC 2012 (2019 AMENDMENT)
- CSA 086-14
- TPIC 2014

(55 % OF 83.6 P.S.F. G.S.L. PLUS 2.1 P.S.F. RAIN LOAD) EQUALS 48.1 P.S.F. SPECIFIED ROOF LIVE LOAD

CSI: TC=0.11/1.00 (D-L:1) , BC=0.07/1.00 (H-I:1) , WB=0.06/1.00 (C-G:1) , SSI=0.13/1.00 (D-L:1)

DOL LUMBER=1.00 NAIL=1.00 LS BEND=1.10 COMP=1.10 SHEAR=1.10 TENS= 1.10

CONTINUED ON PAGE 2

JOB NAME	TRUSS NAME	QUANTITY	PLY	JOB DESC. Woodcreek / Adkins	DRWG NO.
211770	P8	1	1	TRUSS DESC.	

KAMLOOPS TRUSS LTD., Kamloops, BC V2H 1G3

ID:X2qvwXGfFYBXzZFl6ldjmRzCaiR-2JvZiYyShTZ?XMG4RFx8scb0toDoMwYmRczajUzCLVL

DRY: SEASONED LUMBER.

PLATES (table is in inches)

JT	TYPE	PLATES	W	LEN	Y	X
A	TBM1-h	MT20	3.0	4.0		
B	TMW+w	MT20	1.0	4.0		
C	TTW+p	MT20	3.0	4.0	2.25	1.50
D	TMW+w	MT20	1.0	4.0		
E	TBM1-h	MT20	3.0	4.0		
F, G, H						
F	BMW1+w	MT20	1.0	4.0		

LOADING

TOTAL LOAD CASES: (4)

CHORDS

MEMB. FR-TO	MAX. FORCE (LBS)	FACTORED VERT. LOAD (PLF) FROM	TO	LC1	MAX CSI (LC)	MAX. UNBRAC LENGTH
A- J	0 / 15	-156.6	-156.6	0.03	(1)	10.00
J- B	0 / 68	-156.6	-156.6	0.11	(1)	10.00
B- C	0 / 33	-156.6	-156.6	0.11	(1)	10.00
C- D	0 / 33	-156.6	-156.6	0.11	(1)	10.00
D- L	0 / 68	-156.6	-156.6	0.11	(1)	10.00
L- E	0 / 15	-156.6	-156.6	0.03	(1)	10.00
A- I	-41 / 0	-17.5	-17.5	0.07	(1)	6.25
I- H	-26 / 0	-17.5	-17.5	0.07	(1)	6.25
H- G	-47 / 0	-17.5	-17.5	0.04	(1)	6.25
G- F	-47 / 0	-17.5	-17.5	0.04	(1)	6.25
F- K	-26 / 0	-17.5	-17.5	0.07	(1)	6.25
K- E	-41 / 0	-17.5	-17.5	0.07	(1)	6.25

WEBS

MEMB. FR-TO	MAX. FORCE (LBS)	MAX CSI (LC)
G- C	-311 / 0	0.06 (1)
H- B	-398 / 0	0.06 (1)
F- D	-398 / 0	0.06 (1)
I- J	-110 / 4	0.00 (1)
K- L	-110 / 4	0.00 (1)

COMPANION LIVE LOAD FACTOR = 1.00

TRUSS PLATE MANUFACTURER IS NOT RESPONSIBLE FOR QUALITY CONTROL IN THE TRUSS MANUFACTURING PLANT .

NAIL VALUES

PLATE	GRIP(DRY) (PSI) MAX	MIN	SHEAR (PLI) MAX	MIN	SECTION (PLI) MAX	MIN
MT20	650	371	1747	788	1987	1873

PLATE PLACEMENT TOL. = 0.250 inches

PLATE ROTATION TOL. = 5.0 Deg.

JSI GRIP= 0.52 (D) (INPUT = 0.90)
JSI METAL= 0.42 (D) (INPUT = 1.00)

JOB NAME	TRUSS NAME	QUANTITY	PLY	JOB DESC. Woodcreek / Adkins	DRWG NO.
211770	R1	1	1	TRUSS DESC.	

KAMLOOPS TRUSS LTD., Kamloops, BC V2H 1G3

Version 8.420 S Mar 22 2021 MiTek Industries, Inc. Thu May 27 07:07:38 2021 Page 1

ID:X2qvwXGfFYBXzZFl6ldjmRzCaiR-?i1J7EziD4pjmgQTYgzcx1gD?cvKqq13vwShnNzCLVJ

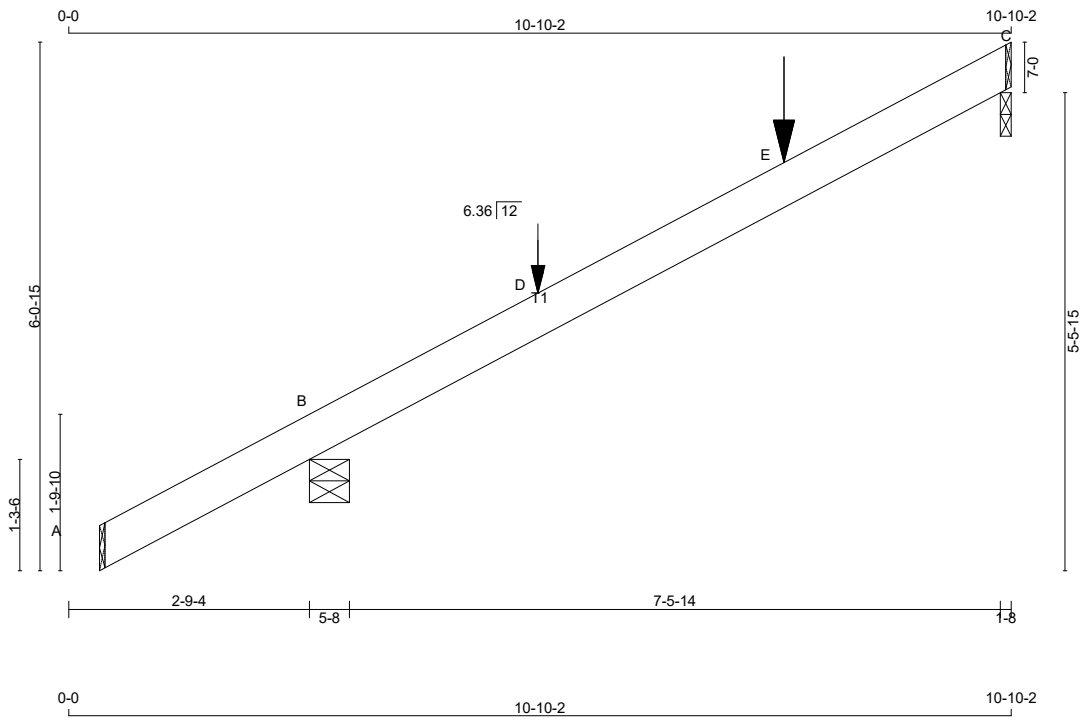

Scale = 1:26.5

TOTAL WEIGHT = 22 lb

LUMBER

N. L. G. A. RULES

CHORDS	SIZE		LUMBER	DESCR.
A - C	2x6	DRY	1650F 1.5E	SPF

DRY: SEASONED LUMBER.

PLATES MISSING OR UNABLE TO PLATE

DIMENSIONS, SUPPORTS AND LOADINGS SPECIFIED BY FABRICATOR TO BE VERIFIED BY BUILDING DESIGNER

BEARINGS

	FACTORED GROSS REACTION		MAXIMUM FACTORED GROSS REACTION			INPUT BRG	REQRD BRG
JT	VERT	HORZ	DOWN	HORZ	UPLIFT	IN-SX	IN-SX
C	639	0	639	0	0	1-8	1-8
B	1105	0	1105	0	0	5-8	5-8

BEVELED PLATE OR SHIM REQUIRED TO PROVIDE FULL BEARING SURFACE WITH TRUSS CHORD AT JT(S): C , B

UNFACTORED REACTIONS

	1ST LCASE	MAX./MIN. COMPONENT REACTIONS					
JT	COMBINED	SNOW	LIVE	PERM.LIVE	WIND	DEAD	SOIL
C	433	392 / 0	0 / 0	0 / 0	0 / 0	41 / 0	0 / 0
B	749	678 / 0	0 / 0	0 / 0	0 / 0	71 / 0	0 / 0

BEARING MATERIAL TO BE SPF NO.2 OR BETTER AT JOINT(S) B

BRACING

TOP CHORD TO BE SHEATHED OR MAX. PURLIN SPACING = 6.25 FT.
MAX. UNBRACED BOTTOM CHORD LENGTH = 0.00 FT OR RIGID CEILING DIRECTLY APPLIED.

ALL PITCH BREAKS AND PERIMETER CORNER JOINTS MUST BE LATERALLY RESTRAINED.

[M]

DESIGN CRITERIA

SPECIFIED LOADS:

TOP CH.	LL	=	48.1	PSF
	DL	=	5.0	PSF
BOT CH.	LL	=	0.0	PSF
	DL	=	7.0	PSF
TOTAL LOAD		=	60.0	PSF

SPACING = 24.0 IN. C/C

THIS TRUSS IS DESIGNED FOR RESIDENTIAL OR SMALL BUILDING REQUIREMENTS OF PART 9, NBCC 2015

THIS DESIGN COMPLIES WITH:
- PART 9 OF BCBC 2018 , ABC 2019
- PART 9 OF OBC 2012 (2019 AMENDMENT)
- CSA 086-14
- TPIC 2014

(55 % OF 83.6 P.S.F. G.S.L. PLUS 2.1 P.S.F. RAIN LOAD) EQUALS 48.1 P.S.F. SPECIFIED ROOF LIVE LOAD

ALLOWABLE DEFL.(LL)= L/180 (0.53")
CALCULATED VERT. DEFL.(LL) = L/ 295 (0.32")
ALLOWABLE DEFL.(TL)= L/180 (0.53")
CALCULATED VERT. DEFL.(TL) = L/ 205 (0.46")

CONTINUED ON PAGE 2

LOADING

TOTAL LOAD CASES: (9)

CHORDS MEMB.	MAX. FACTORED FORCE (LBS)	FACTORED VERT. LOAD (PLF)	LC1	MAX CSI (LC)	WEBS MEMB.	MAX. UNBRAC LENGTH	MAX. FACTORED FORCE (LBS)	MAX CSI (LC)
FR-TO		FROM	TO		FR-TO			
A- B	0 / 111	-156.6	-156.6	0.37 (1)		10.00		
B- D	0 / 27	-156.6	-156.6	0.65 (1)		6.25		
D- E	0 / 27	-156.6	-156.6	0.65 (1)		6.25		
E- C	0 / 27	-156.6	-156.6	0.65 (1)		6.25		

FACTORED CONCENTRATED LOADS (LBS)

JT	LOC.	LC1	MAX-	MAX+	FACE	DIR.	TYPE	HEEL	CONN.
D	5-6-1	-0	-0	---	FRONT	VERT	TOTAL	---	C1
D	5-6-1	1	1	307	BACK	VERT	TOTAL	---	C1
E	8-4-0	-12	-12	---	BACK	VERT	TOTAL	---	C1
E	8-4-0	-12	-12	---	FRONT	VERT	TOTAL	---	C1

CONNECTION REQUIREMENTS

1) **C1:** A SUITABLE HANGER/MECHANICAL CONNECTION IS REQUIRED.

CANTILEVER ANALYSIS HAS BEEN CONSIDERED IN THIS DESIGN

CSI: TC=0.65/1.00 (B-C:1) , BC=0.00/1.00 (n/a:0) , WB=0.00/1.00 (n/a:0) , SSI=0.37/1.00 (B-C:1)

DOL LUMBER=1.00 NAIL=1.00 LS BEND=1.00 COMP=1.00 SHEAR=1.00 TENS= 1.00

COMPANION LIVE LOAD FACTOR = 1.00

TRUSS PLATE MANUFACTURER IS NOT RESPONSIBLE FOR QUALITY CONTROL IN THE TRUSS MANUFACTURING PLANT .

NAIL VALUES

PLATE	GRIP(DRY) (PSI) MAX	MIN	SHEAR (PLI) MAX	MIN	SECTION (PLI) MAX	MIN

PLATE PLACEMENT TOL. = 0.250 inches

PLATE ROTATION TOL. = 5.0 Deg.

JOB NAME	TRUSS NAME	QUANTITY	PLY	JOB DESC. Woodcreek / Adkins	DRWG NO.
211770	ST1	2	1	TRUSS DESC.	

KAMLOOPS TRUSS LTD., Kamloops, BC V2H 1G3

ID:X2qvwXGfFYBXzZFl6ldjmRzCaiR-x494Yw?ylh3R?zarg4?40SlivPbwIjXMMExosFzCLVH

Scale = 1:34.4

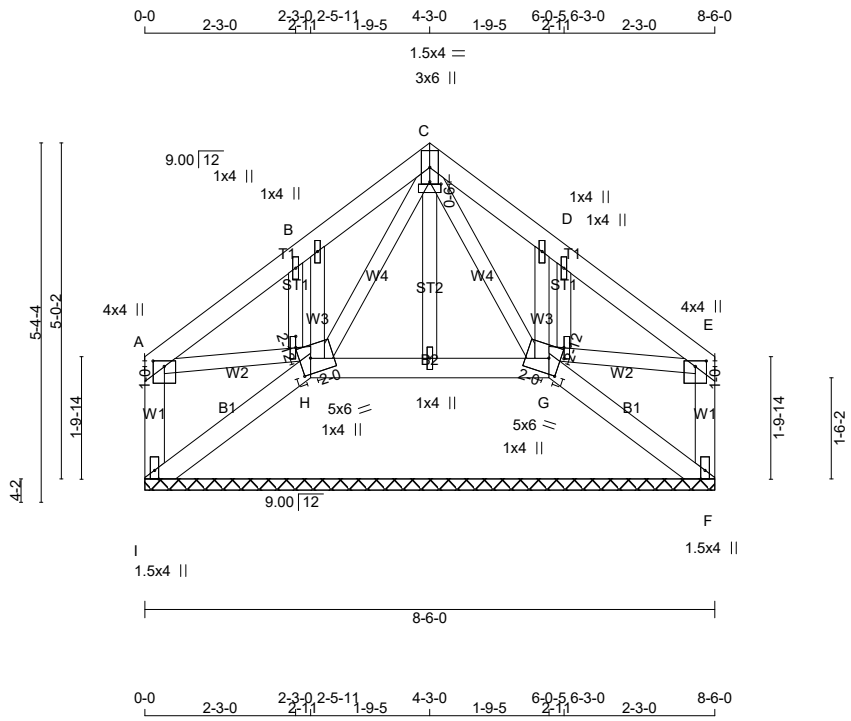

0-0 2-3-0 2-3-0 2-5-11 2-1-1 1-9-5 4-3-0 1-9-5 6-0-5 6-3-0 2-1-1 2-3-0 8-6-0

TOTAL WEIGHT = 2 X 43 = 87 lb

LUMBER

N. L. G. A. RULES

CHORDS	SIZE		LUMBER	DESCR.
I - A	2x4	DRY	1650F 1.5E	SPF
A - C	2x4	DRY	1650F 1.5E	SPF
C - E	2x4	DRY	1650F 1.5E	SPF
F - E	2x4	DRY	1650F 1.5E	SPF
I - H	2x4	DRY	1650F 1.5E	SPF
H - G	2x4	DRY	1650F 1.5E	SPF

DIMENSIONS, SUPPORTS AND LOADINGS SPECIFIED BY FABRICATOR TO BE VERIFIED BY BUILDING DESIGNER

BEARINGS

	FACTORED GROSS REACTION		MAXIMUM FACTORED GROSS REACTION			INPUT BRG	REQRD BRG
JT	VERT	HORZ	DOWN	HORZ	UPLIFT	IN-SX	IN-SX
I	186	0	186	0	0	8-6-0 (5-6-13)	1-8
F	186	0	186	0	0	8-6-0 (5-6-13)	1-8
H	554	0	554	0	0	8-6-0 (5-6-13)	1-8
G	554	0	554	0	0	8-6-0 (5-6-13)	1-8

VALUE IN PARENTHESIS INDICATES EFFECTIVE BEARING LENGTH

UNFACTORED REACTIONS

	1ST LCASE	MAX./MIN. COMPONENT REACTIONS					
JT	COMBINED	SNOW	LIVE	PERM.LIVE	WIND	DEAD	SOIL
I	129	101 / 0	0 / 0	0 / 0	0 / 0	28 / 0	0 / 0
F	129	101 / 0	0 / 0	0 / 0	0 / 0	28 / 0	0 / 0
H	382	307 / 0	0 / 0	0 / 0	0 / 0	74 / 0	0 / 0
G	382	307 / 0	0 / 0	0 / 0	0 / 0	74 / 0	0 / 0

BEARING MATERIAL TO BE SPF NO.2 OR BETTER AT JOINT(S) I, F, H, G

BRACING

TOP CHORD TO BE SHEATHED OR MAX. PURLIN SPACING = 6.25 FT.
MAX. UNBRACED BOTTOM CHORD LENGTH = 10.00 FT OR RIGID CEILING DIRECTLY APPLIED.

ALL PITCH BREAKS AND PERIMETER CORNER JOINTS MUST BE LATERALLY RESTRAINED.

[M]

DESIGN CRITERIA

SPECIFIED LOADS:

TOP CH.	LL	=	48.1	PSF
	DL	=	5.0	PSF
BOT CH.	LL	=	0.0	PSF
	DL	=	7.0	PSF
TOTAL LOAD		=	60.0	PSF

SPACING = 24.0 IN. C/C

THIS TRUSS IS DESIGNED FOR RESIDENTIAL OR SMALL BUILDING REQUIREMENTS OF PART 9, NBCC 2015

THIS DESIGN COMPLIES WITH:
- PART 9 OF BCBC 2018 , ABC 2019
- PART 9 OF OBC 2012 (2019 AMENDMENT)
- CSA 086-14
- TPIC 2014

(55 % OF 83.6 P.S.F. G.S.L. PLUS 2.1 P.S.F. RAIN LOAD) EQUALS 48.1 P.S.F. SPECIFIED ROOF LIVE LOAD

CSI: TC=0.11/1.00 (D-E:1) , BC=0.06/1.00 (G-H:4) , WB=0.06/1.00 (D-G:1) , SSI=0.15/1.00 (D-E:1)

DOL LUMBER=1.00 NAIL=1.00 LS BEND=1.10 COMP=1.10 SHEAR=1.10 TENS= 1.10

CONTINUED ON PAGE 2

JOB NAME	TRUSS NAME	QUANTITY	PLY	JOB DESC. Woodcreek / Adkins	DRWG NO.
211770	ST1	2	1	TRUSS DESC.	

KAMLOOPS TRUSS LTD., Kamloops, BC V2H 1G3

ID:X2qvwXGfFYBXzZFI6IdjmRzCaiR-x494Yw?ylh3R?zarg4?40SlivPbwIjXMMExosFzCLVH

BOT CHORDS
BOT CHORD
WEBS
ALL GABLE WEBS
WEBS
DRY

DRY: SEASONED LUMBER.

GABLE STUDS SPACED AT 2-0-0 OC.

PLATES (table is in inches)

JT	TYPE	PLATES	W	LEN	Y	X
A	TMVW+p	MT20	4.0	4.0	1.00	2.00
B	TMW+w	MT20	1.0	4.0		
C	TTWW+p	MT20	3.0	6.0		
C	NP-p	MT20	1.5	4.0	0.50	2.00
D	TMW+w	MT20	1.0	4.0		
E	TMVW+p	MT20	4.0	4.0	1.00	2.00
F	BMV1+p	MT20	1.5	4.0	Edge	
G	BBWWW1-m	MT20	5.0	6.0	2.75	2.00
G	NP+w	MT20	1.0	4.0	2.00	
H	BBWWW1-m	MT20	5.0	6.0	2.75	2.00
H	NP+w	MT20	1.0	4.0	2.00	
I	BMV1+p	MT20	1.5	4.0	Edge	
J, K, L						
J	NP+w	MT20	1.0	4.0		

Edge - INDICATES REFERENCE CORNER OF PLATE TOUCHES EDGE OF CHORD.

LOADING

TOTAL LOAD CASES: (4)

CHORDS

MEMB. FR-TO	MAX. FORCE (LBS)	FACTORED VERT. LOAD (PLF) FROM	TO	LC1	MAX CSI (LC)	MAX. UNBRAC LENGTH
I- A	-165 / 0	0.0	0.0	0.01 (1)		7.81
A- B	0 / 10	-156.6	-156.6	0.11 (1)		10.00
B- C	-49 / 0	-156.6	-156.6	0.11 (1)		6.25
C- D	-49 / 0	-156.6	-156.6	0.11 (1)		6.25
D- E	0 / 10	-156.6	-156.6	0.11 (1)		10.00
F- E	-165 / 0	0.0	0.0	0.01 (1)		7.81
I- H	0 / 0	-17.5	-17.5	0.03 (4)		10.00
H- G	0 / 56	-17.5	-17.5	0.06 (4)		10.00
G- F	0 / 0	-17.5	-17.5	0.03 (4)		10.00

WEBS

MEMB. FR-TO	MAX. FORCE (LBS)	MAX CSI (LC)
C- G	-86 / 0	0.02 (1)
G- D	-426 / 0	0.06 (1)
G- E	0 / 10	0.00 (1)
H- C	-86 / 0	0.02 (1)
H- B	-426 / 0	0.06 (1)
A- H	0 / 10	0.00 (1)

COMPANION LIVE LOAD FACTOR = 1.00

TRUSS PLATE MANUFACTURER IS NOT RESPONSIBLE FOR QUALITY CONTROL IN THE TRUSS MANUFACTURING PLANT .

NAIL VALUES

PLATE	GRIP(DRY) (PSI) MAX	MIN	SHEAR (PLI) MAX	MIN	SECTION (PLI) MAX	MIN
MT20	650	371	1747	788	1987	1873

PLATE PLACEMENT TOL. = 0.250 inches

PLATE ROTATION TOL. = 5.0 Deg.

JSI GRIP= 0.56 (G) (INPUT = 0.90)
JSI METAL= 0.46 (B) (INPUT = 1.00)

JOB NAME	TRUSS NAME	QUANTITY	PLY	JOB DESC. Woodcreek / Adkins	DRWG NO.
211770	ST2	5	1	TRUSS DESC.	

KAMLOOPS TRUSS LTD., Kamloops, BC V2H 1G3

Version 8.420 S Mar 22 2021 MiTek Industries, Inc. Thu May 27 07:07:42 2021 Page 1

ID:X2qvwXGfFYBXzZFl6ldjmRzCaiR-tTGqzb0DHJJ9FHjEnV2Y5tqx3DG9mdcfqYQux8zCLVF

Scale = 1:34.9

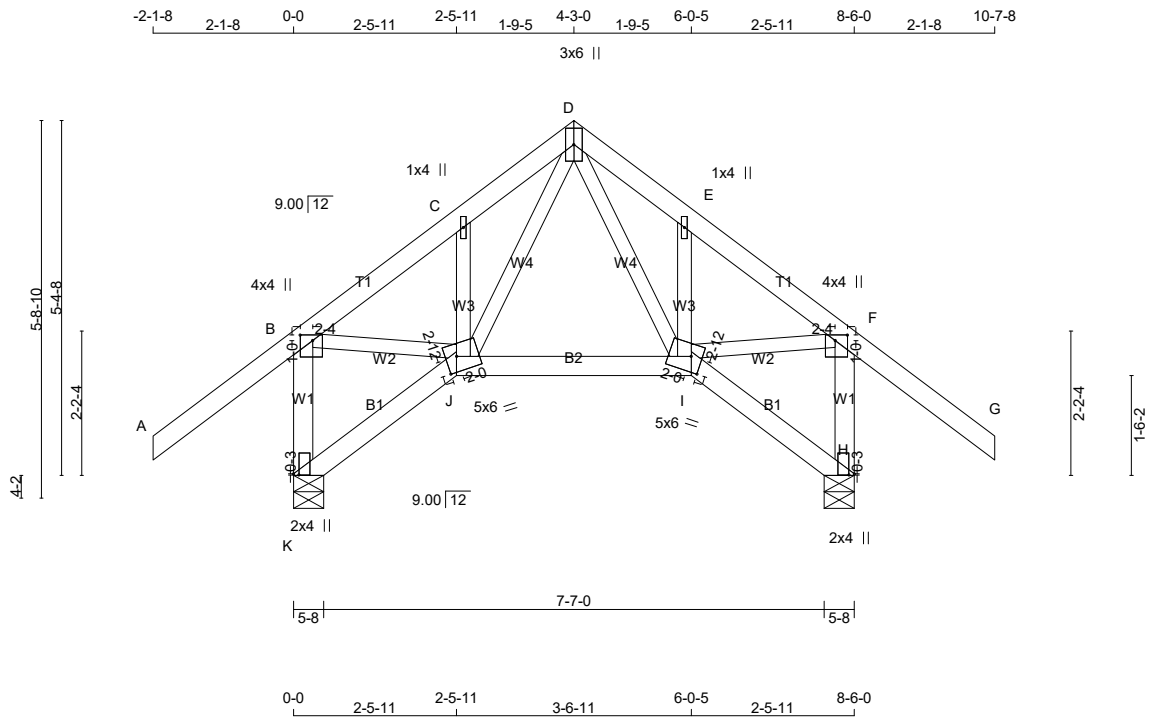

TOTAL WEIGHT = 5 X 47 = 236 lb

[M]

LUMBER

N. L. G. A. RULES

CHORDS	SIZE		LUMBER	DESCR.
K - B	2x4	DRY	1650F 1.5E	SPF
A - D	2x4	DRY	1650F 1.5E	SPF
D - G	2x4	DRY	1650F 1.5E	SPF
H - F	2x4	DRY	1650F 1.5E	SPF
K - J	2x4	DRY	1650F 1.5E	SPF
J - I	2x4	DRY	1650F 1.5E	SPF

DIMENSIONS, SUPPORTS AND LOADINGS SPECIFIED BY FABRICATOR TO BE VERIFIED BY BUILDING DESIGNER

BEARINGS

	FACTORED GROSS REACTION		MAXIMUM FACTORED GROSS REACTION			INPUT BRG	REQRD BRG
JT	VERT	HORZ	DOWN	HORZ	UPLIFT	IN-SX	IN-SX
K	1087	0	1087	0	0	5-8	1-8
H	1087	0	1087	0	0	5-8	1-8

UNFACTORED REACTIONS

	1ST LCASE	MAX./MIN. COMPONENT REACTIONS					
JT	COMBINED	SNOW	LIVE	PERM.LIVE	WIND	DEAD	SOIL
K	745	621 / 0	0 / 0	0 / 0	0 / 0	124 / 0	0 / 0
H	745	621 / 0	0 / 0	0 / 0	0 / 0	124 / 0	0 / 0

BEARING MATERIAL TO BE SPF NO.2 OR BETTER AT JOINT(S) K, H

BRACING

TOP CHORD TO BE SHEATHED OR MAX. PURLIN SPACING = 6.25 FT.
MAX. UNBRACED BOTTOM CHORD LENGTH = 10.00 FT OR RIGID CEILING DIRECTLY APPLIED.

ALL PITCH BREAKS AND PERIMETER CORNER JOINTS MUST BE LATERALLY RESTRAINED.

DESIGN CRITERIA

SPECIFIED LOADS:

TOP CH.	LL	=	48.1	PSF
	DL	=	5.0	PSF
BOT CH.	LL	=	0.0	PSF
	DL	=	7.0	PSF
TOTAL LOAD		=	60.0	PSF

SPACING = 24.0 IN. C/C

THIS TRUSS IS DESIGNED FOR RESIDENTIAL OR SMALL BUILDING REQUIREMENTS OF PART 9, NBCC 2015

THIS DESIGN COMPLIES WITH:
- PART 9 OF BCBC 2018 , ABC 2019
- PART 9 OF OBC 2012 (2019 AMENDMENT)
- CSA 086-14
- TPIC 2014

DESIGN ASSUMPTIONS
-OVERHANG NOT TO BE ALTERED OR CUT OFF.

(55 % OF 83.6 P.S.F. G.S.L. PLUS 2.1 P.S.F. RAIN LOAD) EQUALS 48.1 P.S.F. SPECIFIED ROOF LIVE LOAD

ALLOWABLE DEFL.(LL)= L/180 (0.57")
CALCULATED VERT. DEFL.(LL) = L/ 999 (0.01")
ALLOWABLE DEFL.(TL)= L/180 (0.57")
CALCULATED VERT. DEFL.(TL) = L/ 999 (0.02")

CONTINUED ON PAGE 2

JOB NAME	TRUSS NAME	QUANTITY	PLY	JOB DESC. Woodcreek / Adkins	DRWG NO.
211770	ST2	5	1	TRUSS DESC.	

KAMLOOPS TRUSS LTD., Kamloops, BC V2H 1G3

Version 8.420 S Mar 22 2021 MiTek Industries, Inc. Thu May 27 07:07:42 2021 Page 2

ID:X2qvwXGfFYBXzZFl6ldjmRzCaiR-tTGqzb0DHJJ9FHjEnV2Y5tqx3DG9mdcfqYQux8zCLVF

DRY: SEASONED LUMBER.

PLATES (table is in inches)

JT	TYPE	PLATES	W	LEN	Y	X
B	TMVW+p	MT20	4.0	4.0	1.00	2.25
C	TMW+w	MT20	1.0	4.0		
D	TTWW+p	MT20	3.0	6.0		
E	TMW+w	MT20	1.0	4.0		
F	TMVW+p	MT20	4.0	4.0	1.00	2.25
H	BMV1+p	MT20	2.0	4.0	0.25	1.00
I	BBWWW-m	MT20	5.0	6.0	2.75	2.00
J	BBWWW-m	MT20	5.0	6.0	2.75	2.00
K	BMV1+p	MT20	2.0	4.0	0.25	1.00

LOADING

TOTAL LOAD CASES: (4)

C H O R D S

MEMB. FR-TO	MAX. FACTORED FORCE (LBS)	FACTORED VERT. LOAD (PLF) FROM	TO	LC1	MAX CSI (LC)	MAX. UNBRAC LENGTH
K- B	-1065 / 0	0.0	0.0		0.09 (1)	7.81
A- B	0 / 104	-156.6	-156.6		0.45 (1)	10.00
B- C	-605 / 0	-156.6	-156.6		0.44 (1)	6.25
C- D	-495 / 0	-156.6	-156.6		0.09 (1)	6.25
D- E	-495 / 0	-156.6	-156.6		0.09 (1)	6.25
E- F	-605 / 0	-156.6	-156.6		0.44 (1)	6.25
F- G	0 / 104	-156.6	-156.6		0.45 (1)	10.00
H- F	-1065 / 0	0.0	0.0		0.09 (1)	7.81
K- J	0 / 0	-17.5	-17.5		0.03 (4)	10.00
J- I	0 / 330	-17.5	-17.5		0.07 (1)	10.00
I- H	0 / 0	-17.5	-17.5		0.03 (4)	10.00

W E B S

MEMB. FR-TO	MAX. FACTORED FORCE (LBS)	MAX CSI (LC)
D- I	0 / 166	0.04 (1)
I- E	-149 / 0	0.02 (1)
I- F	0 / 407	0.09 (1)
J- D	0 / 166	0.04 (1)
J- C	-149 / 0	0.02 (1)
B- J	0 / 407	0.09 (1)

CSI: TC=0.45/1.00 (A-B:1) , BC=0.07/1.00 (I-J:1) , WB=0.09/1.00 (F-I:1) , SSI=0.23/1.00 (B-C:1)

DOL LUMBER=1.00 NAIL=1.00 LS BEND=1.10 COMP=1.10 SHEAR=1.10 TENS= 1.10

COMPANION LIVE LOAD FACTOR = 1.00

TRUSS PLATE MANUFACTURER IS NOT RESPONSIBLE FOR QUALITY CONTROL IN THE TRUSS MANUFACTURING PLANT .

NAIL VALUES

PLATE	GRIP(DRY) (PSI) MAX	MIN	SHEAR (PLI) MAX	MIN	SECTION (PLI) MAX	MIN
MT20	650	371	1747	788	1987	1873

PLATE PLACEMENT TOL. = 0.250 inches

PLATE ROTATION TOL. = 5.0 Deg.

JSI GRIP= 0.88 (H) (INPUT = 0.90)
JSI METAL= 0.56 (K) (INPUT = 1.00)

JOB NAME	TRUSS NAME	QUANTITY	PLY	JOB DESC. Woodcreek / Adkins	DRWG NO.
211770	ST3	3	1	TRUSS DESC.	

KAMLOOPS TRUSS LTD., Kamloops, BC V2H 1G3

Version 8.420 S Mar 22 2021 MiTek Industries, Inc. Thu May 27 07:07:44 2021 Page 1

ID:X2qvwXGfFYBXzZFl6ldjmRzCaiR-psOaOH2TowZsUbtdvw40BIwOg0xbEWoyHrv??1zCLVD

Scale = 1:32.9

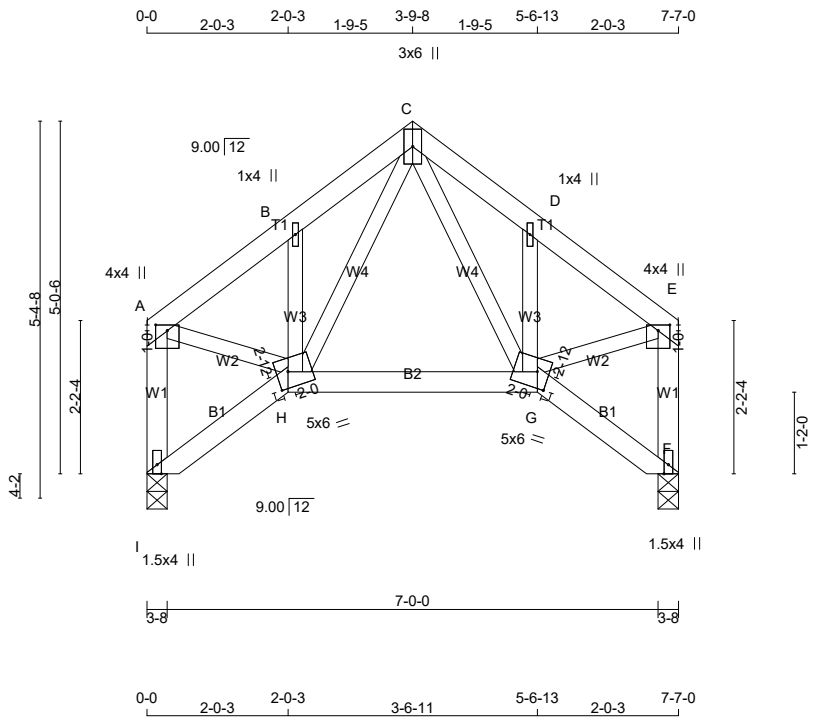

TOTAL WEIGHT = 3 X 38 = 113 lb

[M][F]

LUMBER

N. L. G. A. RULES

CHORDS	SIZE		LUMBER	DESCR.
I - A	2x4	DRY	1650F 1.5E	SPF
A - C	2x4	DRY	1650F 1.5E	SPF
C - E	2x4	DRY	1650F 1.5E	SPF
F - E	2x4	DRY	1650F 1.5E	SPF
I - H	2x4	DRY	1650F 1.5E	SPF
H - G	2x4	DRY	1650F 1.5E	SPF

DIMENSIONS, SUPPORTS AND LOADINGS SPECIFIED BY FABRICATOR TO BE VERIFIED BY BUILDING DESIGNER

BEARINGS

JT	FACTORED GROSS REACTION VERT	HORZ	MAXIMUM FACTORED GROSS REACTION DOWN	HORZ	UPLIFT	INPUT BRG IN-SX	REQRD BRG IN-SX
I	660	0	660	0	0	3-8	3-8
F	660	0	660	0	0	3-8	3-8

UNFACTORED REACTIONS

JT	1ST LCASE COMBINED	MAX./MIN. COMPONENT REACTIONS SNOW	LIVE	PERM.LIVE	WIND	DEAD	SOIL
I	455	364 / 0	0 / 0	0 / 0	0 / 0	91 / 0	0 / 0
F	455	364 / 0	0 / 0	0 / 0	0 / 0	91 / 0	0 / 0

BRACING

TOP CHORD TO BE SHEATHED OR MAX. PURLIN SPACING = 6.25 FT.
MAX. UNBRACED BOTTOM CHORD LENGTH = 10.00 FT OR RIGID CEILING DIRECTLY APPLIED.

ALL PITCH BREAKS AND PERIMETER CORNER JOINTS MUST BE LATERALLY RESTRAINED.

LOADING

TOTAL LOAD CASES: (4)

CHORDS

MEMB. FR-TO	MAX. FACTORED FORCE (LBS)	FACTORED VERT. LOAD (PLF) FROM	TO	LC1	MAX CSI (LC)
I- A	-643 / 0	0.0	0.0	0.06 (1)	
A- B	-570 / 0	-156.6	-156.6	0.06 (1)	
B- C	-604 / 0	-156.6	-156.6	0.04 (1)	

WEBS

MEMB. FR-TO	MAX. UNBRAC LENGTH	MEMB. FR-TO	MAX. FACTORED FORCE (LBS)	MAX CSI (LC)
C- G	7.81		0 / 271	0.06 (1)
G- D	6.25		-350 / 0	0.06 (1)
G- E	6.25		0 / 493	0.11 (1)

DESIGN CRITERIA

SPECIFIED LOADS:

TOP CH.	LL	=	48.1	PSF
	DL	=	5.0	PSF
BOT CH.	LL	=	0.0	PSF
	DL	=	7.0	PSF
TOTAL LOAD		=	60.0	PSF

SPACING = 24.0 IN. C/C

THIS TRUSS IS DESIGNED FOR RESIDENTIAL OR SMALL BUILDING REQUIREMENTS OF PART 9, NBCC 2015

THIS DESIGN COMPLIES WITH:
- PART 9 OF BCBC 2018 , ABC 2019
- PART 9 OF OBC 2012 (2019 AMENDMENT)
- CSA 086-14
- TPIC 2014

(55 % OF 83.6 P.S.F. G.S.L. PLUS 2.1 P.S.F. RAIN LOAD) EQUALS 48.1 P.S.F. SPECIFIED ROOF LIVE LOAD

ALLOWABLE DEFL.(LL)= L/180 (0.51")
CALCULATED VERT. DEFL.(LL) = L/ 999 (0.01")
ALLOWABLE DEFL.(TL)= L/180 (0.51")
CALCULATED VERT. DEFL.(TL) = L/ 999 (0.02")

CSI: TC=0.06/1.00 (D-E:1) , BC=0.07/1.00 (G-H:1) , WB=0.11/1.00 (A-H:1) , SSI=0.11/1.00 (A-B:1)

CONTINUED ON PAGE 2

JOB NAME	TRUSS NAME	QUANTITY	PLY	JOB DESC. Woodcreek / Adkins	DRWG NO.
211770	ST3	3	1	TRUSS DESC.	

KAMLOOPS TRUSS LTD., Kamloops, BC V2H 1G3

Version 8.420 S Mar 22 2021 MiTek Industries, Inc. Thu May 27 07:07:44 2021 Page 2

ID:X2qvwXGfFYBXzZFI6ldjmRzCaiR-psOaOH2TowZsUbtdvw40BIwOg0xbEWoyHrv??1zCLVD

DRY: SEASONED LUMBER.

PLATES (table is in inches)

JT	TYPE	PLATES	W	LEN	Y	X
A	TMVW+p	MT20	4.0	4.0	1.00	2.00
B	TMW+w	MT20	1.0	4.0		
C	TTWW+p	MT20	3.0	6.0		
D	TMW+w	MT20	1.0	4.0		
E	TMVW+p	MT20	4.0	4.0	1.00	2.00
F	BMV1+p	MT20	1.5	4.0	Edge	
G	BBWWW-m	MT20	5.0	6.0	2.75	2.00
H	BBWWW-m	MT20	5.0	6.0	2.75	2.00
I	BMV1+p	MT20	1.5	4.0	Edge	

Edge - INDICATES REFERENCE CORNER OF PLATE TOUCHES EDGE OF CHORD.

LOADING

TOTAL LOAD CASES: (4)

CHORDS

MEMB. FR-TO	MAX. FACTORED FORCE (LBS)	FACTORED VERT. LOAD (PLF) FROM	TO	LC1 MAX CSI (LC)	MAX. UNBRAC LENGTH
C- D	-604 / 0	-156.6	-156.6	0.04 (1)	6.25
D- E	-570 / 0	-156.6	-156.6	0.06 (1)	6.25
F- E	-643 / 0	0.0	0.0	0.06 (1)	7.81
I- H	0 / 0	-17.5	-17.5	0.02 (4)	10.00
H- G	0 / 348	-17.5	-17.5	0.07 (1)	10.00
G- F	0 / 0	-17.5	-17.5	0.02 (4)	10.00

WEBS

MEMB. FR-TO	MAX. FACTORED FORCE (LBS)	MAX CSI (LC)
H- C	0 / 271	0.06 (1)
H- B	-350 / 0	0.06 (1)
A- H	0 / 493	0.11 (1)

DOL LUMBER=1.00 NAIL=1.00 LS BEND=1.10 COMP=1.10 SHEAR=1.10
TENS= 1.10

COMPANION LIVE LOAD FACTOR = 1.00

TRUSS PLATE MANUFACTURER IS NOT RESPONSIBLE FOR QUALITY CONTROL IN THE TRUSS MANUFACTURING PLANT .

NAIL VALUES

PLATE	GRIP(DRY) (PSI) MAX	MIN	SHEAR (PLI) MAX	MIN	SECTION (PLI) MAX	MIN
MT20	650	371	1747	788	1987	1873

PLATE PLACEMENT TOL. = 0.250 inches

PLATE ROTATION TOL. = 5.0 Deg.

JSI GRIP= 0.87 (I) (INPUT = 0.90)
JSI METAL= 0.43 (I) (INPUT = 1.00)

JOB NAME	TRUSS NAME	QUANTITY	PLY	JOB DESC. Woodcreek / Adkins	DRWG NO.
211770	ST4	3	1	TRUSS DESC.	

KAMLOOPS TRUSS LTD., Kamloops, BC V2H 1G3

Version 8.420 S Mar 22 2021 MiTek Industries, Inc. Thu May 27 07:07:46 2021 Page 1

ID:X2qvwXGfFYBXzZFl6ldjmRzCaiR-mEWLpz3jKXpaku1?0L6UGj?d2qT iHvFk9O64vzCLVB

Scale = 1:85.2

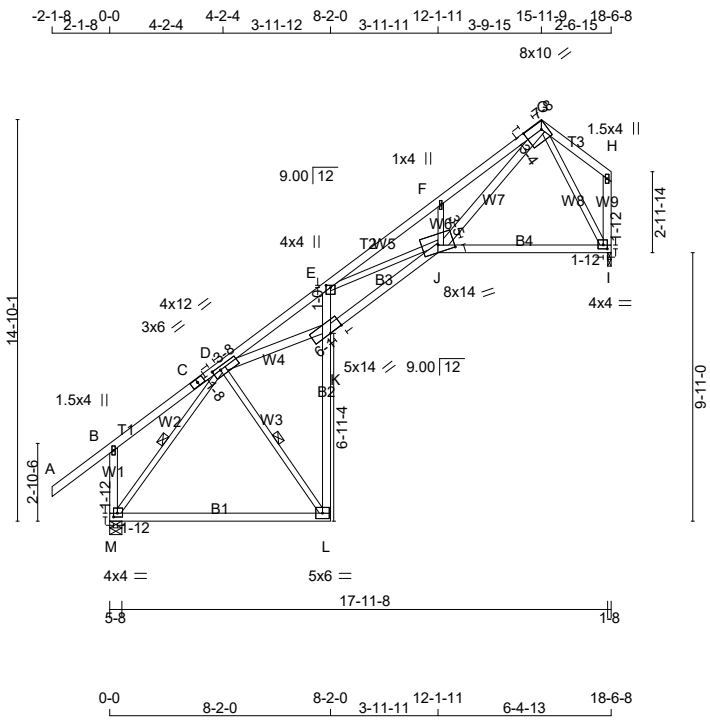

TOTAL WEIGHT = 3 X 98 = 293 lb

[M][F]

LUMBER

N. L. G. A. RULES

CHORDS	SIZE		LUMBER	DESCR.
A - C	2x4	DRY	1650F 1.5E	SPF
C - G	2x4	DRY	1650F 1.5E	SPF
G - H	2x4	DRY	1650F 1.5E	SPF
M - B	2x4	DRY	1650F 1.5E	SPF
I - H	2x4	DRY	1650F 1.5E	SPF
M - L	2x4	DRY	1650F 1.5E	SPF

DIMENSIONS, SUPPORTS AND LOADINGS SPECIFIED BY FABRICATOR TO BE VERIFIED BY BUILDING DESIGNER

BEARINGS

JT	FACTORED GROSS REACTION VERT	HORZ	MAXIMUM GROSS REACTION DOWN	FACTORED GROSS REACTION HORZ	UPLIFT	INPUT BRG IN-SX	REQRD BRG IN-SX
M	1961	0	1961	0	0	5-8	2-2
I	1614	0	1614	0	0	1-8	1-12

ALLOW FOR 0.6" OF HORIZONTAL MOVEMENT DUE TO TOTAL LOAD

UNFACTORED REACTIONS

JT	1ST LCASE COMBINED	MAX./MIN. COMPONENT REACTIONS SNOW	LIVE	PERM.LIVE	WIND	DEAD	SOIL
M	1348	1103 / 0	0 / 0	0 / 0	0 / 0	245 / 0	0 / 0
I	1113	891 / 0	0 / 0	0 / 0	0 / 0	223 / 0	0 / 0

BEARING MATERIAL TO BE SPF NO.2 OR BETTER AT JOINT(S) M

BRACING

TOP CHORD TO BE SHEATHED OR MAX. PURLIN SPACING = 3.14 FT.
MAX. UNBRACED BOTTOM CHORD LENGTH = 7.81 FT OR RIGID CEILING DIRECTLY APPLIED.

ALL PITCH BREAKS AND PERIMETER CORNER JOINTS MUST BE LATERALLY RESTRAINED.

1 LATERAL BRACE(S) AT 1/ 2 LENGTH OF D-L, D-M.

END VERTICAL(S) MUST BE SHEATHED OR HAVE BRACES AS INDICATED IN
THE MAX. UNBRACED LENGTH COLUMN OF THE TABLE BELOW

DESIGN CRITERIA

SPECIFIED LOADS:

TOP CH.	LL	=	48.1	PSF
	DL	=	5.0	PSF
BOT CH.	LL	=	0.0	PSF
	DL	=	7.0	PSF
TOTAL LOAD		=	60.0	PSF

SPACING = 24.0 IN. C/C

THIS TRUSS IS DESIGNED FOR RESIDENTIAL OR SMALL BUILDING REQUIREMENTS OF PART 9, NBCC 2015

THIS DESIGN COMPLIES WITH:
- PART 9 OF BCBC 2018 , ABC 2019
- PART 9 OF OBC 2012 (2019 AMENDMENT)
- CSA 086-14
- TPIC 2014

(55 % OF 83.6 P.S.F. G.S.L. PLUS 2.1 P.S.F. RAIN LOAD) EQUALS 48.1 P.S.F. SPECIFIED ROOF LIVE LOAD

ALLOWABLE DEFL.(LL)= L/180 (1.24")
CALCULATED VERT. DEFL.(LL) = L/ 532 (0.42")
ALLOWABLE DEFL.(TL)= L/180 (1.24")
CALCULATED VERT. DEFL.(TL) = L/ 337 (0.66")

CSI: TC=0.45/1.00 (A-B:1) , BC=0.72/1.00 (J-K:1) , WB=0.65/1.00 (G-I:1) , SSI=0.24/1.00 (B-D:1)

CONTINUED ON PAGE 2

JOB NAME	TRUSS NAME	QUANTITY	PLY	JOB DESC. Woodcreek / Adkins	DRWG NO.
211770	ST4	3	1	TRUSS DESC.	

KAMLOOPS TRUSS LTD., Kamloops, BC V2H 1G3

Version 8.420 S Mar 22 2021 MiTek Industries, Inc. Thu May 27 07:07:46 2021 Page 2

ID:X2qvwXGfFYBXzZFl6ldjmRzCaiR-mEWLpz3jKXpaku1?0L6UGj?d2qT_iHvFk9O64vzCLVB

[illegible]
[illegible]
[illegible]

JOB NAME	TRUSS NAME	QUANTITY	PLY	JOB DESC. Woodcreek / Adkins	DRWG NO.
211770	ST5	1	1	TRUSS DESC.	

KAMLOOPS TRUSS LTD., Kamloops, BC V2H 1G3

Version 8.420 S Mar 22 2021 MiTek Industries, Inc. Thu May 27 07:07:47 2021 Page 1

ID:X2qvwXGfFYBXzZFl6ldjmRzCaiR-ER4j0J4L5rxRL2cCa3djoxYooEzKRtrOzp8fcMzCLVA

Scale = 1:34.9

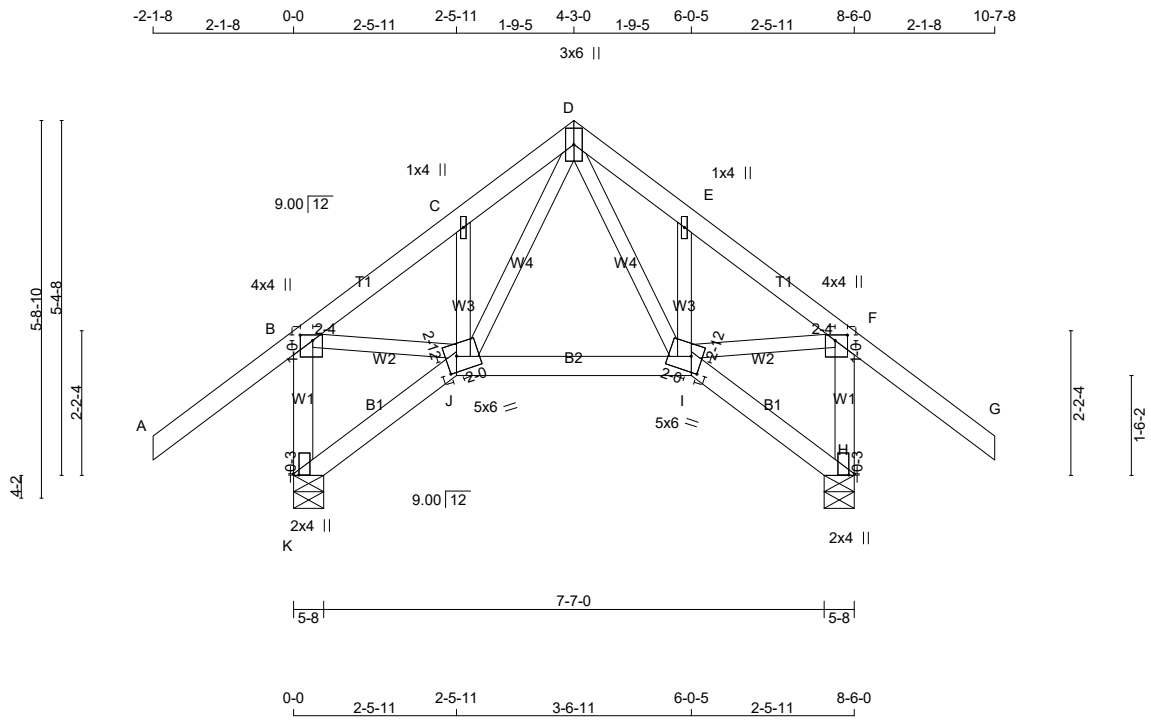

TOTAL WEIGHT = 47 lb

LUMBER

N. L. G. A. RULES

CHORDS	SIZE		LUMBER	DESCR.
K - B	2x4	DRY	1650F 1.5E	SPF
A - D	2x4	DRY	1650F 1.5E	SPF
D - G	2x4	DRY	1650F 1.5E	SPF
H - F	2x4	DRY	1650F 1.5E	SPF
K - J	2x4	DRY	1650F 1.5E	SPF
J - I	2x4	DRY	1650F 1.5E	SPF

DIMENSIONS, SUPPORTS AND LOADINGS SPECIFIED BY FABRICATOR TO BE VERIFIED BY BUILDING DESIGNER

BEARINGS

	FACTORED GROSS REACTION		MAXIMUM FACTORED GROSS REACTION			INPUT BRG	REQRD BRG
JT	VERT	HORZ	DOWN	HORZ	UPLIFT	IN-SX	IN-SX
K	1087	0	1087	0	0	5-8	1-8
H	1087	0	1087	0	0	5-8	1-8

UNFACTORED REACTIONS

	1ST LCASE	MAX./MIN. COMPONENT REACTIONS					
JT	COMBINED	SNOW	LIVE	PERM.LIVE	WIND	DEAD	SOIL
K	745	621 / 0	0 / 0	0 / 0	0 / 0	124 / 0	0 / 0
H	745	621 / 0	0 / 0	0 / 0	0 / 0	124 / 0	0 / 0

BEARING MATERIAL TO BE SPF NO.2 OR BETTER AT JOINT(S) K, H

BRACING

TOP CHORD TO BE SHEATHED OR MAX. PURLIN SPACING = 6.25 FT.
MAX. UNBRACED BOTTOM CHORD LENGTH = 10.00 FT OR RIGID CEILING DIRECTLY APPLIED.

ALL PITCH BREAKS AND PERIMETER CORNER JOINTS MUST BE LATERALLY RESTRAINED.

[M]

DESIGN CRITERIA

SPECIFIED LOADS:

TOP CH.	LL =	48.1	PSF
	DL =	5.0	PSF
BOT CH.	LL =	0.0	PSF
	DL =	7.0	PSF
TOTAL LOAD	=	60.0	PSF

SPACING = 24.0 IN. C/C

THIS TRUSS IS DESIGNED FOR RESIDENTIAL OR SMALL BUILDING REQUIREMENTS OF PART 9, NBCC 2015

THIS DESIGN COMPLIES WITH:
- PART 9 OF BCBC 2018 , ABC 2019
- PART 9 OF OBC 2012 (2019 AMENDMENT)
- CSA 086-14
- TPIC 2014

DESIGN ASSUMPTIONS
-OVERHANG NOT TO BE ALTERED OR CUT OFF.

(55 % OF 83.6 P.S.F. G.S.L. PLUS 2.1 P.S.F. RAIN LOAD) EQUALS 48.1 P.S.F. SPECIFIED ROOF LIVE LOAD

ALLOWABLE DEFL.(LL)= L/180 (0.57")
CALCULATED VERT. DEFL.(LL) = L/ 999 (0.01")
ALLOWABLE DEFL.(TL)= L/180 (0.57")
CALCULATED VERT. DEFL.(TL) = L/ 999 (0.02")

CONTINUED ON PAGE 2

JOB NAME	TRUSS NAME	QUANTITY	PLY	JOB DESC. Woodcreek / Adkins	DRWG NO.
211770	ST5	1	1	TRUSS DESC.	

KAMLOOPS TRUSS LTD., Kamloops, BC V2H 1G3

Version 8.420 S Mar 22 2021 MiTek Industries, Inc. Thu May 27 07:07:47 2021 Page 2

ID:X2qvwXGfFYBXzZFI6ldjmRzCaiR-ER4j0J4L5rxRL2cCa3djoxYooEzKRtrOzp8fcMzCLVA

DRY: SEASONED LUMBER.

PLATES (table is in inches)

JT	TYPE	PLATES	W	LEN	Y	X
B	TMVW+p	MT20	4.0	4.0	1.00	2.25
C	TMW+w	MT20	1.0	4.0		
D	TTWW+p	MT20	3.0	6.0		
E	TMW+w	MT20	1.0	4.0		
F	TMVW+p	MT20	4.0	4.0	1.00	2.25
H	BMV1+p	MT20	2.0	4.0	0.25	1.00
I	BBWWW-m	MT20	5.0	6.0	2.75	2.00
J	BBWWW-m	MT20	5.0	6.0	2.75	2.00
K	BMV1+p	MT20	2.0	4.0	0.25	1.00

LOADING

TOTAL LOAD CASES: (4)

C H O R D S

MEMB. FR-TO	MAX. FACTORED FORCE (LBS)	FACTORED VERT. LOAD (PLF) FROM	TO	LC1	MAX CSI (LC)	MAX. UNBRAC LENGTH
K- B	-1065 / 0	0.0	0.0		0.09 (1)	7.81
A- B	0 / 104	-156.6	-156.6		0.45 (1)	10.00
B- C	-605 / 0	-156.6	-156.6		0.44 (1)	6.25
C- D	-495 / 0	-156.6	-156.6		0.09 (1)	6.25
D- E	-495 / 0	-156.6	-156.6		0.09 (1)	6.25
E- F	-605 / 0	-156.6	-156.6		0.44 (1)	6.25
F- G	0 / 104	-156.6	-156.6		0.45 (1)	10.00
H- F	-1065 / 0	0.0	0.0		0.09 (1)	7.81
K- J	0 / 0	-17.5	-17.5		0.03 (4)	10.00
J- I	0 / 330	-17.5	-17.5		0.07 (1)	10.00
I- H	0 / 0	-17.5	-17.5		0.03 (4)	10.00

W E B S

MEMB. FR-TO	MAX. FACTORED FORCE (LBS)	MAX CSI (LC)
D- I	0 / 166	0.04 (1)
I- E	-149 / 0	0.02 (1)
I- F	0 / 407	0.09 (1)
J- D	0 / 166	0.04 (1)
J- C	-149 / 0	0.02 (1)
B- J	0 / 407	0.09 (1)

CSI: TC=0.45/1.00 (A-B:1) , BC=0.07/1.00 (I-J:1) , WB=0.09/1.00 (B-J:1) , SSI=0.23/1.00 (B-C:1)

DOL LUMBER=1.00 NAIL=1.00 LS BEND=1.10 COMP=1.10 SHEAR=1.10 TENS= 1.10

COMPANION LIVE LOAD FACTOR = 1.00

TRUSS PLATE MANUFACTURER IS NOT RESPONSIBLE FOR QUALITY CONTROL IN THE TRUSS MANUFACTURING PLANT .

NAIL VALUES

PLATE	GRIP(DRY) (PSI) MAX	MIN	SHEAR (PLI) MAX	MIN	SECTION (PLI) MAX	MIN
MT20	650	371	1747	788	1987	1873

PLATE PLACEMENT TOL. = 0.250 inches

PLATE ROTATION TOL. = 5.0 Deg.

JSI GRIP= 0.88 (K) (INPUT = 0.90)
JSI METAL= 0.56 (K) (INPUT = 1.00)

JOB NAME	TRUSS NAME	QUANTITY	PLY	JOB DESC.	DRWG NO.
211770	ST6	1	1	Woodcreek / Adkins TRUSS DESC.	

KAMLOOPS TRUSS LTD., Kamloops, BC V2H 1G3

Version 8.420 S Mar 22 2021 MiTek Industries, Inc. Thu May 27 07:07:49 2021 Page 1

ID:X2qvwXGfFYBXzZFl6ldjmRzCaiR-ApCTR?6cdSB9bMmahTgBuMdFP1fmvn1hR7dmgEzCLV8

Scale = 1:32.9

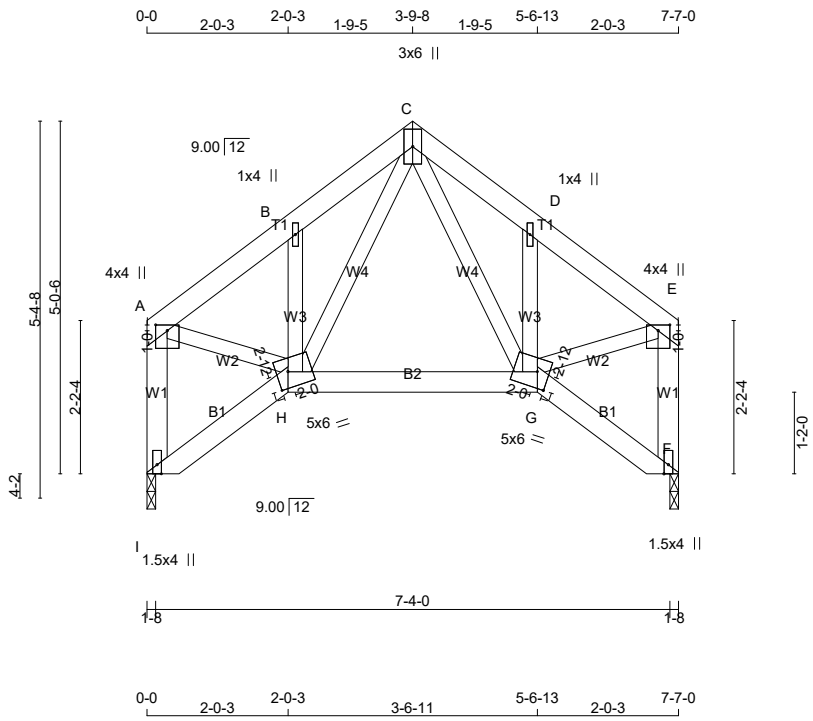

TOTAL WEIGHT = 38 lb

[M][F]

LUMBER

N. L. G. A. RULES

CHORDS	SIZE		LUMBER	DESCR.
I - A	2x4	DRY	1650F 1.5E	SPF
A - C	2x4	DRY	1650F 1.5E	SPF
C - E	2x4	DRY	1650F 1.5E	SPF
F - E	2x4	DRY	1650F 1.5E	SPF
I - H	2x4	DRY	1650F 1.5E	SPF
H - G	2x4	DRY	1650F 1.5E	SPF

DIMENSIONS, SUPPORTS AND LOADINGS SPECIFIED BY FABRICATOR TO BE VERIFIED BY BUILDING DESIGNER

BEARINGS

JT	FACTORED GROSS REACTION VERT	HORZ	MAXIMUM FACTORED GROSS REACTION DOWN	HORZ	UPLIFT	INPUT BRG	REQRD BRG
I	660	0	660	0	0	1-8	1-8
F	660	0	660	0	0	1-8	1-8

UNFACTORED REACTIONS

JT	1ST LCASE COMBINED	MAX./MIN. COMPONENT REACTIONS SNOW	LIVE	PERM.LIVE	WIND	DEAD	SOIL
I	455	364 / 0	0 / 0	0 / 0	0 / 0	91 / 0	0 / 0
F	455	364 / 0	0 / 0	0 / 0	0 / 0	91 / 0	0 / 0

BRACING

TOP CHORD TO BE SHEATHED OR MAX. PURLIN SPACING = 6.25 FT.
MAX. UNBRACED BOTTOM CHORD LENGTH = 10.00 FT OR RIGID CEILING DIRECTLY APPLIED.

ALL PITCH BREAKS AND PERIMETER CORNER JOINTS MUST BE LATERALLY RESTRAINED.

LOADING

TOTAL LOAD CASES: (4)

CHORDS

MEMB. FR-TO	MAX. FACTORED FORCE (LBS)	FACTORED VERT. LOAD (PLF) FROM	TO	LC1	MAX CSI (LC)
I- A	-643 / 0	0.0	0.0	0.06 (1)	7.81
A- B	-570 / 0	-156.6	-156.6	0.06 (1)	6.25
B- C	-604 / 0	-156.6	-156.6	0.04 (1)	6.25

WEBS

MEMB. FR-TO	MAX. FACTORED FORCE (LBS)	MAX CSI (LC)
C- G	0 / 271	0.06 (1)
G- D	-350 / 0	0.06 (1)
G- E	0 / 493	0.11 (1)

DESIGN CRITERIA

SPECIFIED LOADS:

TOP CH.	LL	=	48.1	PSF
	DL	=	5.0	PSF
BOT CH.	LL	=	0.0	PSF
	DL	=	7.0	PSF
TOTAL LOAD		=	60.0	PSF

SPACING = 24.0 IN. C/C

THIS TRUSS IS DESIGNED FOR RESIDENTIAL OR SMALL BUILDING REQUIREMENTS OF PART 9, NBCC 2015

THIS DESIGN COMPLIES WITH:
- PART 9 OF BCBC 2018 , ABC 2019
- PART 9 OF OBC 2012 (2019 AMENDMENT)
- CSA 086-14
- TPIC 2014

(55 % OF 83.6 P.S.F. G.S.L. PLUS 2.1 P.S.F. RAIN LOAD) EQUALS 48.1 P.S.F. SPECIFIED ROOF LIVE LOAD

ALLOWABLE DEFL.(LL)= L/180 (0.51")
CALCULATED VERT. DEFL.(LL) = L/ 999 (0.01")
ALLOWABLE DEFL.(TL)= L/180 (0.51")
CALCULATED VERT. DEFL.(TL) = L/ 999 (0.02")

CSI: TC=0.06/1.00 (A-B:1) , BC=0.07/1.00 (G-H:1) , WB=0.11/1.00 (A-H:1) , SSI=0.11/1.00 (A-B:1)

CONTINUED ON PAGE 2

JOB NAME	TRUSS NAME	QUANTITY	PLY	JOB DESC. Woodcreek / Adkins	DRWG NO.
211770	ST6	1	1	TRUSS DESC.	

DRY: SEASONED LUMBER.

PLATES (table is in inches)

JT	TYPE	PLATES	W	LEN	Y	X
A	TMVW+p	MT20	4.0	4.0	1.00	2.00
B	TMW+w	MT20	1.0	4.0		
C	TTWW+p	MT20	3.0	6.0		
D	TMW+w	MT20	1.0	4.0		
E	TMVW+p	MT20	4.0	4.0	1.00	2.00
F	BMV1+p	MT20	1.5	4.0	Edge	
G	BBWWW-m	MT20	5.0	6.0	2.75	2.00
H	BBWWW-m	MT20	5.0	6.0	2.75	2.00
I	BMV1+p	MT20	1.5	4.0	Edge	

Edge - INDICATES REFERENCE CORNER OF PLATE TOUCHES EDGE OF CHORD.

LOADING
TOTAL LOAD CASES: (4)

C H O R D S

MEMB. FR-TO	MAX. FACTORED FORCE (LBS)	FACTORED VERT. LOAD (PLF) FROM	TO	LC1	MAX CSI (LC)	MAX. UNBRAC LENGTH
C- D	-604 / 0	-156.6	-156.6	0.04 (1)		6.25
D- E	-570 / 0	-156.6	-156.6	0.06 (1)		6.25
F- E	-643 / 0	0.0	0.0	0.06 (1)		7.81
I- H	0 / 0	-17.5	-17.5	0.02 (4)		10.00
H- G	0 / 348	-17.5	-17.5	0.07 (1)		10.00
G- F	0 / 0	-17.5	-17.5	0.02 (4)		10.00

W E B S

MEMB. FR-TO	MAX. FACTORED FORCE (LBS)	MAX CSI (LC)
H- C	0 / 271	0.06 (1)
H- B	-350 / 0	0.06 (1)
A- H	0 / 493	0.11 (1)

DOL LUMBER=1.00 NAIL=1.00 LS BEND=1.10 COMP=1.10 SHEAR=1.10
TENS= 1.10

COMPANION LIVE LOAD FACTOR = 1.00

TRUSS PLATE MANUFACTURER IS NOT RESPONSIBLE FOR QUALITY CONTROL IN THE TRUSS MANUFACTURING PLANT .

NAIL VALUES

PLATE	GRIP(DRY) (PSI) MAX	MIN	SHEAR (PLI) MAX	MIN	SECTION (PLI) MAX	MIN
MT20	650	371	1747	788	1987	1873

PLATE PLACEMENT TOL. = 0.250 inches

PLATE ROTATION TOL. = 5.0 Deg.

JSI GRIP= 0.87 (I) (INPUT = 0.90)
JSI METAL= 0.43 (I) (INPUT = 1.00)

JOB NAME	TRUSS NAME	QUANTITY	PLY	JOB DESC. Woodcreek / Adkins	DRWG NO.
211770	ST7	1	1	TRUSS DESC.	

KAMLOOPS TRUSS LTD., Kamloops, BC V2H 1G3

Version 8.420 S Mar 22 2021 MiTek Industries, Inc. Thu May 27 07:07:51 2021 Page 1

ID:X2qvwXGfFYBXzZFI6ldjmRzCaiR-6CJEsg7s93StqgvzpuifzniWJrHANbP_uR6tl7zCLV6

Scale = 1:43.9

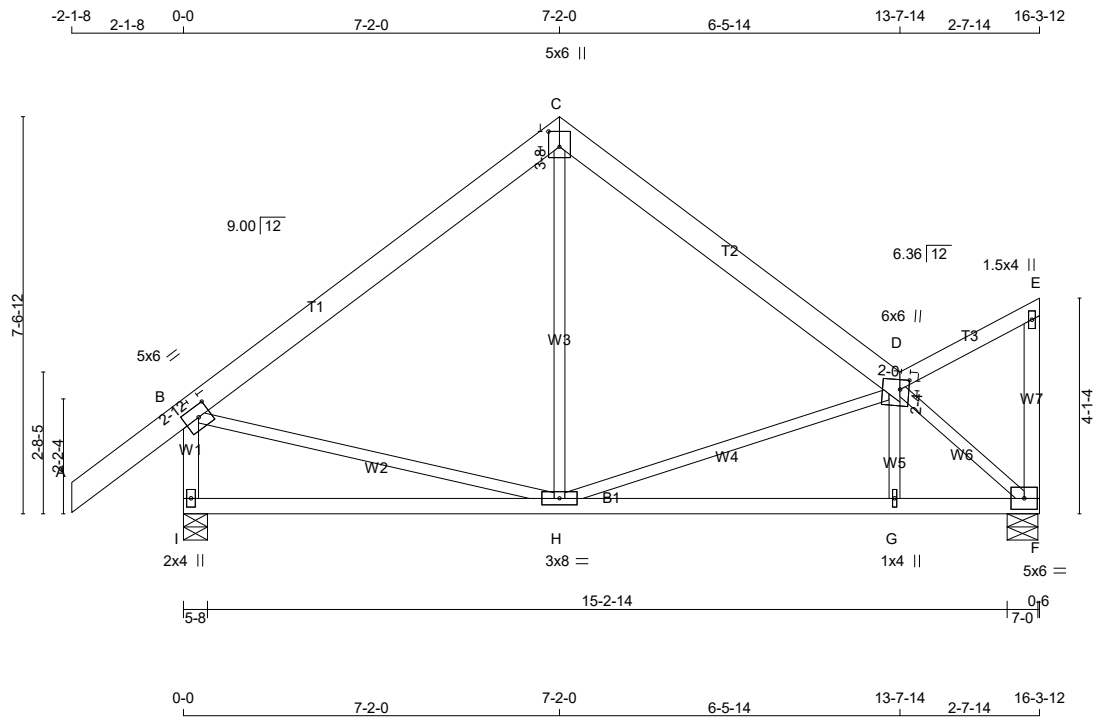

TOTAL WEIGHT = 85 lb

[M][F]

LUMBER

N. L. G. A. RULES

CHORDS	SIZE		LUMBER	DESCR.
A - C	2x6	DRY	1650F 1.5E	SPF
C - D	2x6	DRY	1650F 1.5E	SPF
D - E	2x4	DRY	1650F 1.5E	SPF
F - E	2x4	DRY	1650F 1.5E	SPF
I - B	2x4	DRY	1650F 1.5E	SPF
I - F	2x4	DRY	1650F 1.5E	SPF

ALL WEBS

DIMENSIONS, SUPPORTS AND LOADINGS SPECIFIED BY FABRICATOR TO BE VERIFIED BY BUILDING DESIGNER

BEARINGS

	FACTORED GROSS REACTION		MAXIMUM FACTORED GROSS REACTION			INPUT BRG	REQRD BRG
JT	VERT	HORZ	DOWN	HORZ	UPLIFT	IN-SX	IN-SX
F	1420	0	1420	0	0	7-0	1-9
I	1775	0	1775	0	0	5-8	2-4

UNFACTORED REACTIONS

	1ST LCASE	MAX./MIN. COMPONENT REACTIONS					
JT	COMBINED	SNOW	LIVE	PERM.LIVE	WIND	DEAD	SOIL
F	980	784 / 0	0 / 0	0 / 0	0 / 0	196 / 0	0 / 0
I	1220	1001 / 0	0 / 0	0 / 0	0 / 0	218 / 0	0 / 0

BEARING MATERIAL TO BE SPF NO.2 OR BETTER AT JOINT(S) F, I

BRACING

TOP CHORD TO BE SHEATHED OR MAX. PURLIN SPACING = 6.25 FT.
MAX. UNBRACED BOTTOM CHORD LENGTH = 10.00 FT OR RIGID CEILING DIRECTLY APPLIED.

ALL PITCH BREAKS AND PERIMETER CORNER JOINTS MUST BE LATERALLY RESTRAINED.

DESIGN CRITERIA

SPECIFIED LOADS:

TOP CH.	LL	=	48.1	PSF
	DL	=	5.0	PSF
BOT CH.	LL	=	0.0	PSF
	DL	=	7.0	PSF
TOTAL LOAD		=	60.0	PSF

SPACING = 24.0 IN. C/C

THIS TRUSS IS DESIGNED FOR RESIDENTIAL OR SMALL BUILDING REQUIREMENTS OF PART 9, NBCC 2015

THIS DESIGN COMPLIES WITH:
- PART 9 OF BCBC 2018 , ABC 2019
- PART 9 OF OBC 2012 (2019 AMENDMENT)
- CSA 086-14
- TPIC 2014

(55 % OF 83.6 P.S.F. G.S.L. PLUS 2.1 P.S.F. RAIN LOAD) EQUALS 48.1 P.S.F. SPECIFIED ROOF LIVE LOAD

ALLOWABLE DEFL.(LL)= L/180 (1.09")
CALCULATED VERT. DEFL.(LL) = L/ 999 (0.04")
ALLOWABLE DEFL.(TL)= L/180 (1.09")
CALCULATED VERT. DEFL.(TL) = L/ 999 (0.07")

CSI: TC=0.35/1.00 (B-C:1) , BC=0.27/1.00 (G-H:1) , WB=0.50/1.00 (D-H:1) , SSI=0.27/1.00 (B-C:1)

CONTINUED ON PAGE 2

JOB NAME	TRUSS NAME	QUANTITY	PLY	JOB DESC. Woodcreek / Adkins	DRWG NO.
211770	ST7	1	1	TRUSS DESC.	

KAMLOOPS TRUSS LTD., Kamloops, BC V2H 1G3

ID:X2qvwXGfFYBXzZFI6ldjmRzCaiR-6CJEsg7s93StqgvzpuifzniWJrHANbP_uR6tl7zCLV6

NOTES
EXCEPT

DRY: SEASONED LUMBER.

PLATES (table is in inches)

JT	TYPE	PLATES	W	LEN	Y	X
B	TMVW-t	MT20	5.0	6.0	2.50	2.75
C	TTW+p	MT20	5.0	6.0	3.50	2.50
D	TTWWW+m	MT20	6.0	6.0	2.25	2.00
E	TMV+p	MT20	1.5	4.0		
F	BMVW1-t	MT20	5.0	6.0		
G	BMW+w	MT20	1.0	4.0		
H	BMWWW-t	MT20	3.0	8.0		
I	BMV1+p	MT20	2.0	4.0		

LOADING

TOTAL LOAD CASES: (4)

C H O R D S

MEMB. FR-TO	MAX. FACTORED FORCE (LBS)	FACTORED VERT. LOAD LC1 (PLF) FROM	TO	MAX CSI (LC)	MAX. UNBRAC LENGTH
A- B	0 / 106	-156.6	-156.6	0.19 (1)	10.00
B- C	-1017 / 0	-156.6	-156.6	0.35 (1)	6.25
C- D	-1013 / 0	-156.6	-156.6	0.29 (1)	6.25
D- E	0 / 0	-156.6	-156.6	0.16 (1)	10.00
F- E	-208 / 0	0.0	0.0	0.04 (1)	7.81
I- B	-1726 / 0	0.0	0.0	0.13 (1)	7.08
I- H	0 / 0	-17.5	-17.5	0.18 (4)	10.00
H- G	0 / 1362	-17.5	-17.5	0.27 (1)	10.00
G- F	0 / 1359	-17.5	-17.5	0.18 (1)	10.00

W E B S

MEMB. FR-TO	MAX. FACTORED FORCE (LBS)	MAX CSI (LC)
H- C	0 / 157	0.05 (4)
H- D	-582 / 0	0.50 (1)
G- D	0 / 90	0.03 (4)
D- F	-1806 / 0	0.40 (1)
B- H	0 / 838	0.19 (1)

DOL LUMBER=1.00 NAIL=1.00 LS BEND=1.10 COMP=1.10 SHEAR=1.10
TENS= 1.10

COMPANION LIVE LOAD FACTOR = 1.00

TRUSS PLATE MANUFACTURER IS NOT RESPONSIBLE FOR QUALITY CONTROL IN THE TRUSS MANUFACTURING PLANT .

NAIL VALUES

PLATE	GRIP(DRY) (PSI) MAX	MIN	SHEAR (PLI) MAX	MIN	SECTION (PLI) MAX	MIN
MT20	650	371	1747	788	1987	1873

PLATE PLACEMENT TOL. = 0.250 inches

PLATE ROTATION TOL. = 5.0 Deg.

JSI GRIP= 0.86 (I) (INPUT = 0.90)
JSI METAL= 0.36 (I) (INPUT = 1.00)

JOB NAME	TRUSS NAME	QUANTITY	PLY	JOB DESC. Woodcreek / Adkins	DRWG NO.
211770	ST8	1	1	TRUSS DESC.	

KAMLOOPS TRUSS LTD., Kamloops, BC V2H 1G3

Version 8.420 S Mar 22 2021 MiTek Industries, Inc. Thu May 27 07:07:53 2021 Page 1

ID:X2qvwXGfFYBXzZFl6ldjmRzCaiR-3aR_HM96hhib3z3LwJk72CosLfyVrPNGLlb_p?zCLV4

Scale = 1:43.9

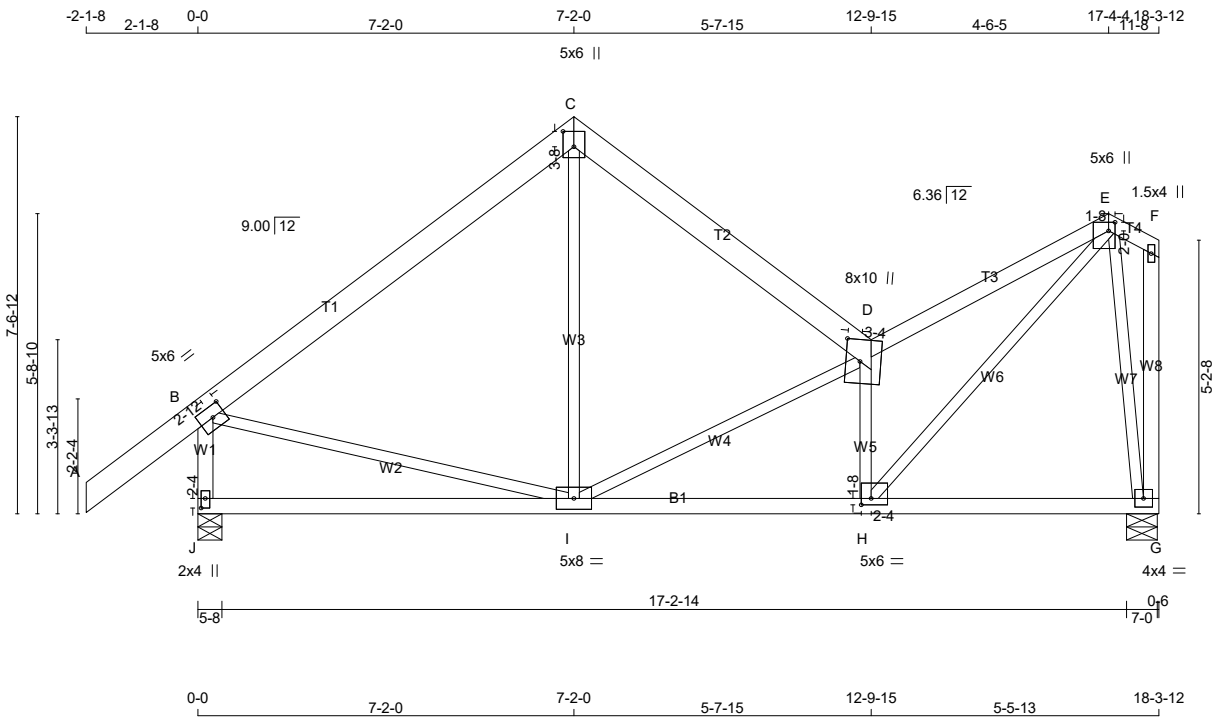

TOTAL WEIGHT = 98 lb

[M][F]

LUMBER

N. L. G. A. RULES

CHORDS	SIZE		LUMBER	DESCR.
A - C	2x6	DRY	1650F 1.5E	SPF
C - D	2x6	DRY	1650F 1.5E	SPF
D - E	2x4	DRY	1650F 1.5E	SPF
E - F	2x4	DRY	1650F 1.5E	SPF
J - B	2x4	DRY	1650F 1.5E	SPF
G - F	2x4	DRY	1650F 1.5E	SPF

DIMENSIONS, SUPPORTS AND LOADINGS SPECIFIED BY FABRICATOR TO BE VERIFIED BY BUILDING DESIGNER

BEARINGS

	FACTORED GROSS REACTION		MAXIMUM FACTORED GROSS REACTION			INPUT BRG	REQRD BRG
JT	VERT	HORZ	DOWN	HORZ	UPLIFT	IN-SX	IN-SX
J	1949	0	1949	0	0	5-8	2-13
G	1595	0	1595	0	0	7-0	1-12

UNFACTORED REACTIONS

	1ST LCASE	MAX./MIN. COMPONENT REACTIONS					
JT	COMBINED	SNOW	LIVE	PERM.LIVE	WIND	DEAD	SOIL
J	1340	1097 / 0	0 / 0	0 / 0	0 / 0	242 / 0	0 / 0
G	1100	880 / 0	0 / 0	0 / 0	0 / 0	220 / 0	0 / 0

BEARING MATERIAL TO BE SPF NO.2 OR BETTER AT JOINT(S) J, G

BRACING

TOP CHORD TO BE SHEATHED OR MAX. PURLIN SPACING = 4.56 FT.
MAX. UNBRACED BOTTOM CHORD LENGTH = 10.00 FT OR RIGID CEILING DIRECTLY APPLIED.

ALL PITCH BREAKS AND PERIMETER CORNER JOINTS MUST BE LATERALLY RESTRAINED.

DESIGN CRITERIA

SPECIFIED LOADS:

TOP CH.	LL	=	48.1	PSF
	DL	=	5.0	PSF
BOT CH.	LL	=	0.0	PSF
	DL	=	7.0	PSF
TOTAL LOAD		=	60.0	PSF

SPACING = 24.0 IN. C/C

THIS TRUSS IS DESIGNED FOR RESIDENTIAL OR SMALL BUILDING REQUIREMENTS OF PART 9, NBCC 2015

THIS DESIGN COMPLIES WITH:
- PART 9 OF BCBC 2018 , ABC 2019
- PART 9 OF OBC 2012 (2019 AMENDMENT)
- CSA 086-14
- TPIC 2014

(55 % OF 83.6 P.S.F. G.S.L. PLUS 2.1 P.S.F. RAIN LOAD) EQUALS 48.1 P.S.F. SPECIFIED ROOF LIVE LOAD

ALLOWABLE DEFL.(LL)= L/180 (1.22")
CALCULATED VERT. DEFL.(LL) = L/ 999 (0.11")
ALLOWABLE DEFL.(TL)= L/180 (1.22")
CALCULATED VERT. DEFL.(TL) = L/ 999 (0.18")

CSI: TC=0.38/1.00 (D-E:1) , BC=0.34/1.00 (H-I:1) , WB=0.86/1.00 (D-I:1) , SSI=0.27/1.00 (B-C:1)

CONTINUED ON PAGE 2

JOB NAME	TRUSS NAME	QUANTITY	PLY	JOB DESC. Woodcreek / Adkins	DRWG NO.
211770	ST8	1	1	TRUSS DESC.	

KAMLOOPS TRUSS LTD., Kamloops, BC V2H 1G3

ID:X2qvwXGfFYBXzZFl6ldjmRzCaiR-3aR_HM96hhib3z3LwJk72CosLfyVrPNGLlb_p?zCLV4

EXCEPT

DRY: SEASONED LUMBER.

PLATES (table is in inches)

JT	TYPE	PLATES	W	LEN	Y	X
B	TMVW-t	MT20	5.0	6.0	2.50	2.75
C	TTW+p	MT20	5.0	6.0	3.50	2.50
D	TTWW+m	MT20	8.0	10.0	5.00	3.25
E	TTWW+p	MT20	5.0	6.0	2.00	1.50
F	TMV+p	MT20	1.5	4.0		
G	BMVW1-t	MT20	4.0	4.0		
H	BMWW-t	MT20	5.0	6.0	1.50	2.25
I	BMWWW-t	MT20	5.0	8.0		
J	BMV1+p	MT20	2.0	4.0	2.25	1.00

LOADING

TOTAL LOAD CASES: (4)

C H O R D S

MEMB. FR-TO	MAX. FACTORED FORCE (LBS)	FACTORED VERT. LOAD LC1 (PLF) FROM	TO	MAX CSI (LC)	MAX. UNBRAC LENGTH
A- B	0 / 106	-156.6	-156.6	0.19 (1)	10.00
B- C	-1235 / 0	-156.6	-156.6	0.35 (1)	6.25
C- D	-1228 / 0	-156.6	-156.6	0.22 (1)	6.25
D- E	-2450 / 0	-156.6	-156.6	0.38 (1)	4.56
E- F	0 / 0	-156.6	-156.6	0.02 (1)	10.00
J- B	-1898 / 0	0.0	0.0	0.14 (1)	6.84
G- F	-75 / 0	0.0	0.0	0.03 (1)	7.81
J- I	0 / 0	-17.5	-17.5	0.16 (4)	10.00
I- H	0 / 2077	-17.5	-17.5	0.34 (1)	10.00
H- G	0 / 260	-17.5	-17.5	0.12 (1)	10.00

W E B S

MEMB. FR-TO	MAX. FACTORED FORCE (LBS)	MAX CSI (LC)
I- C	0 / 466	0.10 (1)
I- D	-1228 / 0	0.86 (1)
H- D	-2133 / 0	0.40 (1)
H- E	0 / 2908	0.65 (1)
B- I	0 / 1017	0.23 (1)
E- G	-1491 / 0	0.72 (1)

DOL LUMBER=1.00 NAIL=1.00 LS BEND=1.10 COMP=1.10 SHEAR=1.10
TENS= 1.10

COMPANION LIVE LOAD FACTOR = 1.00

TRUSS PLATE MANUFACTURER IS NOT RESPONSIBLE FOR QUALITY CONTROL IN THE TRUSS MANUFACTURING PLANT .

NAIL VALUES

PLATE	GRIP(DRY) (PSI) MAX	MIN	SHEAR (PLI) MAX	MIN	SECTION (PLI) MAX	MIN
MT20	650	371	1747	788	1987	1873

PLATE PLACEMENT TOL. = 0.250 inches

PLATE ROTATION TOL. = 5.0 Deg.

JSI GRIP= 0.90 (G) (INPUT = 0.90)
JSI METAL= 0.43 (H) (INPUT = 1.00)

JOB NAME	TRUSS NAME	QUANTITY	PLY	JOB DESC. Woodcreek / Adkins	DRWG NO.
211770	ST9	1	1	TRUSS DESC.	

KAMLOOPS TRUSS LTD., Kamloops, BC V2H 1G3

ID:X2qvwXGfFYBXzZFl6ldjmRzCaiR-?zZki2ANDIyJJHDk2knb7dt9DSegJHmZp345uuzCLV2

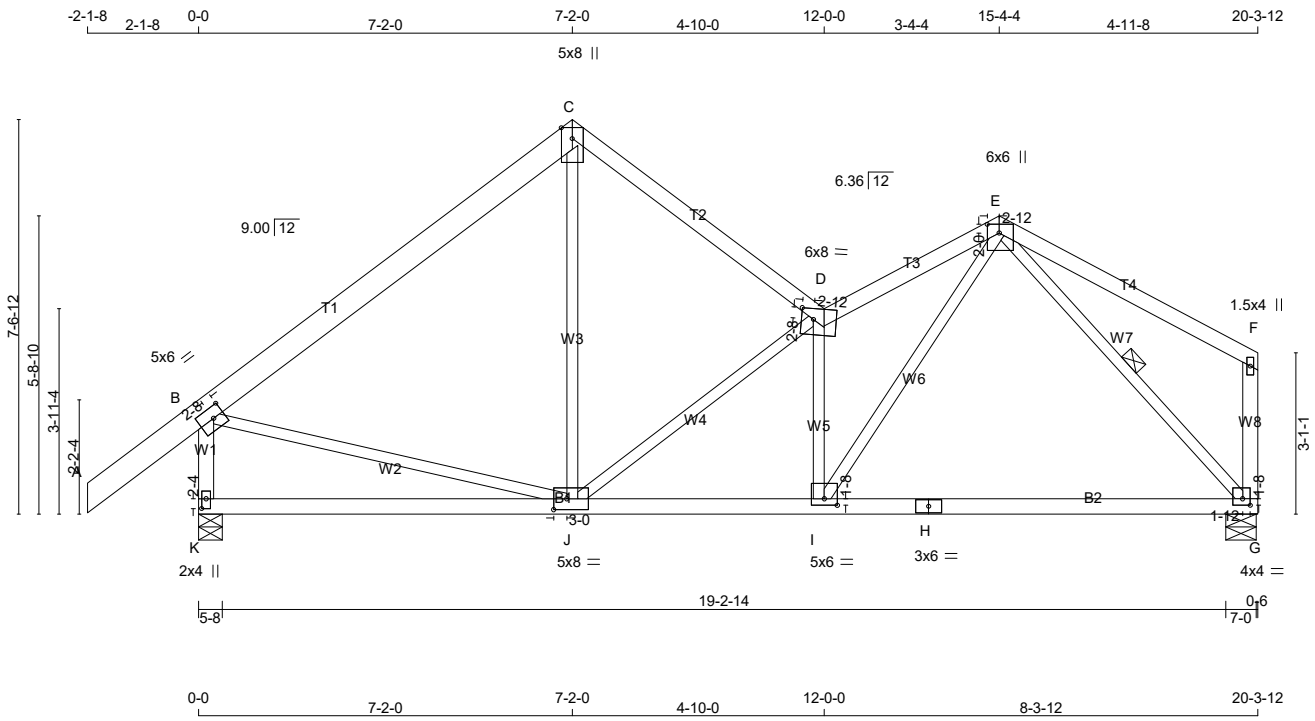

TOTAL WEIGHT = 97 lb

[M][F]

LUMBER

N. L. G. A. RULES

CHORDS	SIZE		LUMBER	DESCR.
A - C	2x6	DRY	1650F 1.5E	SPF
C - D	2x4	DRY	1650F 1.5E	SPF
D - E	2x4	DRY	1650F 1.5E	SPF
E - F	2x4	DRY	1650F 1.5E	SPF
K - B	2x4	DRY	1650F 1.5E	SPF
G - F	2x4	DRY	1650F 1.5E	SPF

DIMENSIONS, SUPPORTS AND LOADINGS SPECIFIED BY FABRICATOR TO BE VERIFIED BY BUILDING DESIGNER

BEARINGS

	FACTORED GROSS REACTION		MAXIMUM FACTORED GROSS REACTION			INPUT BRG	REQRD BRG
JT	VERT	HORZ	DOWN	HORZ	UPLIFT	IN-SX	IN-SX
K	2123	0	2123	0	0	5-8	3-6
G	1769	0	1769	0	0	7-0	1-15

UNFACTORED REACTIONS

	1ST LCASE	MAX./MIN. COMPONENT REACTIONS					
JT	COMBINED	SNOW	LIVE	PERM.LIVE	WIND	DEAD	SOIL
K	1460	1193 / 0	0 / 0	0 / 0	0 / 0	266 / 0	0 / 0
G	1220	976 / 0	0 / 0	0 / 0	0 / 0	244 / 0	0 / 0

BEARING MATERIAL TO BE SPF NO.2 OR BETTER AT JOINT(S) K, G

BRACING

TOP CHORD TO BE SHEATHED OR MAX. PURLIN SPACING = 4.50 FT.
MAX. UNBRACED BOTTOM CHORD LENGTH = 10.00 FT OR RIGID CEILING DIRECTLY APPLIED.

ALL PITCH BREAKS AND PERIMETER CORNER JOINTS MUST BE LATERALLY RESTRAINED.

1 LATERAL BRACE(S) AT 1/ 2 LENGTH OF E-G.

END VERTICAL(S) MUST BE SHEATHED OR HAVE BRACES AS INDICATED IN
THE MAX. UNBRACED LENGTH COLUMN OF THE TABLE BELOW

DESIGN CRITERIA

SPECIFIED LOADS:

TOP CH.	LL	=	48.1	PSF
	DL	=	5.0	PSF
BOT CH.	LL	=	0.0	PSF
	DL	=	7.0	PSF
TOTAL LOAD		=	60.0	PSF

SPACING = 24.0 IN. C/C

THIS TRUSS IS DESIGNED FOR RESIDENTIAL OR SMALL BUILDING REQUIREMENTS OF PART 9, NBCC 2015

THIS DESIGN COMPLIES WITH:
- PART 9 OF BCBC 2018 , ABC 2019
- PART 9 OF OBC 2012 (2019 AMENDMENT)
- CSA 086-14
- TPIC 2014

(55 % OF 83.6 P.S.F. G.S.L. PLUS 2.1 P.S.F. RAIN LOAD) EQUALS 48.1 P.S.F. SPECIFIED ROOF LIVE LOAD

ALLOWABLE DEFL.(LL)= L/180 (1.35")
CALCULATED VERT. DEFL.(LL) = L/ 999 (0.11")
ALLOWABLE DEFL.(TL)= L/180 (1.35")
CALCULATED VERT. DEFL.(TL) = L/ 999 (0.24")

CSI: TC=0.55/1.00 (E-F:1) , BC=0.36/1.00 (I-J:1) , WB=0.99/1.00 (D-J:1) , SSI=0.27/1.00 (B-C:1)

CONTINUED ON PAGE 2

JOB NAME	TRUSS NAME	QUANTITY	PLY	JOB DESC. Woodcreek / Adkins	DRWG NO.
211770	ST9	1	1	TRUSS DESC.	

KAMLOOPS TRUSS LTD., Kamloops, BC V2H 1G3

ID:X2qvwXGfFYBXzZFl6ldjmRzCaiR-?zZki2ANDIyJJHDk2knb7dt9DSegJHmZp345uuzCLV2

[illegible]
[illegible]
[illegible]
EXCEPT

DRY: SEASONED LUMBER.

PLATES (table is in inches)

JT	TYPE	PLATES	W	LEN	Y	X
B	TMVW-t	MT20	5.0	6.0	2.50	2.50
C	TTW+p	MT20	5.0	8.0	Edge	
D	TTWW-m	MT20	6.0	8.0	2.50	2.75
E	TTWW+p	MT20	6.0	6.0	2.00	2.75
F	TMV+p	MT20	1.5	4.0		
G	BMVW1-t	MT20	4.0	4.0	1.50	1.75
H	BS-t	MT20	3.0	6.0		
I	BMWW-t	MT20	5.0	6.0	1.50	3.00
J	BMWWW-t	MT20	5.0	8.0	2.50	3.00
K	BMV1+p	MT20	2.0	4.0	2.25	1.00

Edge - INDICATES REFERENCE CORNER OF PLATE TOUCHES EDGE OF CHORD.

LOADING

TOTAL LOAD CASES: (4)

C H O R D S

MEMB. FR-TO	MAX. FACTORED FORCE (LBS)	FACTORED VERT. LOAD (PLF) FROM	TO	LC1	MAX CSI (LC)	MAX. UNBRAC LENGTH
A- B	0 / 106	-156.6	-156.6	0.19 (1)	10.00	
B- C	-1443 / 0	-156.6	-156.6	0.36 (1)	6.25	
C- D	-1430 / 0	-156.6	-156.6	0.41 (1)	5.55	
D- E	-2804 / 0	-156.6	-156.6	0.23 (1)	4.50	
E- F	0 / 0	-156.6	-156.6	0.55 (1)	10.00	
K- B	-2069 / 0	0.0	0.0	0.15 (1)	6.61	
G- F	-388 / 0	0.0	0.0	0.04 (1)	7.81	
K- J	0 / 0	-17.5	-17.5	0.16 (4)	10.00	
J- I	0 / 2421	-17.5	-17.5	0.36 (1)	10.00	
I- H	0 / 1206	-17.5	-17.5	0.28 (1)	10.00	
H- G	0 / 1206	-17.5	-17.5	0.28 (1)	10.00	

W E B S

MEMB. FR-TO	MAX. FACTORED FORCE (LBS)	MAX CSI (LC)
J- C	0 / 780	0.18 (1)
J- D	-1587 / 0	0.99 (1)
I- D	-1858 / 0	0.46 (1)
I- E	0 / 2353	0.53 (1)
B- J	0 / 1185	0.27 (1)
E- G	-1784 / 0	0.61 (1)

DOL LUMBER=1.00 NAIL=1.00 LS BEND=1.10 COMP=1.10 SHEAR=1.10
TENS= 1.10

COMPANION LIVE LOAD FACTOR = 1.00

TRUSS PLATE MANUFACTURER IS NOT RESPONSIBLE FOR QUALITY CONTROL IN THE TRUSS MANUFACTURING PLANT .

NAIL VALUES

PLATE	GRIP(DRY) (PSI) MAX	MIN	SHEAR (PLI) MAX	MIN	SECTION (PLI) MAX	MIN
MT20	650	371	1747	788	1987	1873

PLATE PLACEMENT TOL. = 0.250 inches

PLATE ROTATION TOL. = 5.0 Deg.

JSI GRIP= 0.89 (E) (INPUT = 0.90)
JSI METAL= 0.51 (H) (INPUT = 1.00)

JOB NAME	TRUSS NAME	QUANTITY	PLY	JOB DESC. Woodcreek / Adkins	DRWG NO.
211770	ST10	2	2	TRUSS DESC.	

KAMLOOPS TRUSS LTD., Kamloops, BC V2H 1G3

ID:X2qvwXGfFYBXzZFl6ldjmRzCaiR-xMgV7kCdlvC0YbN799p3C2yZ_GGbnFJsGNZBymzCLV0

Scale = 1:65.7

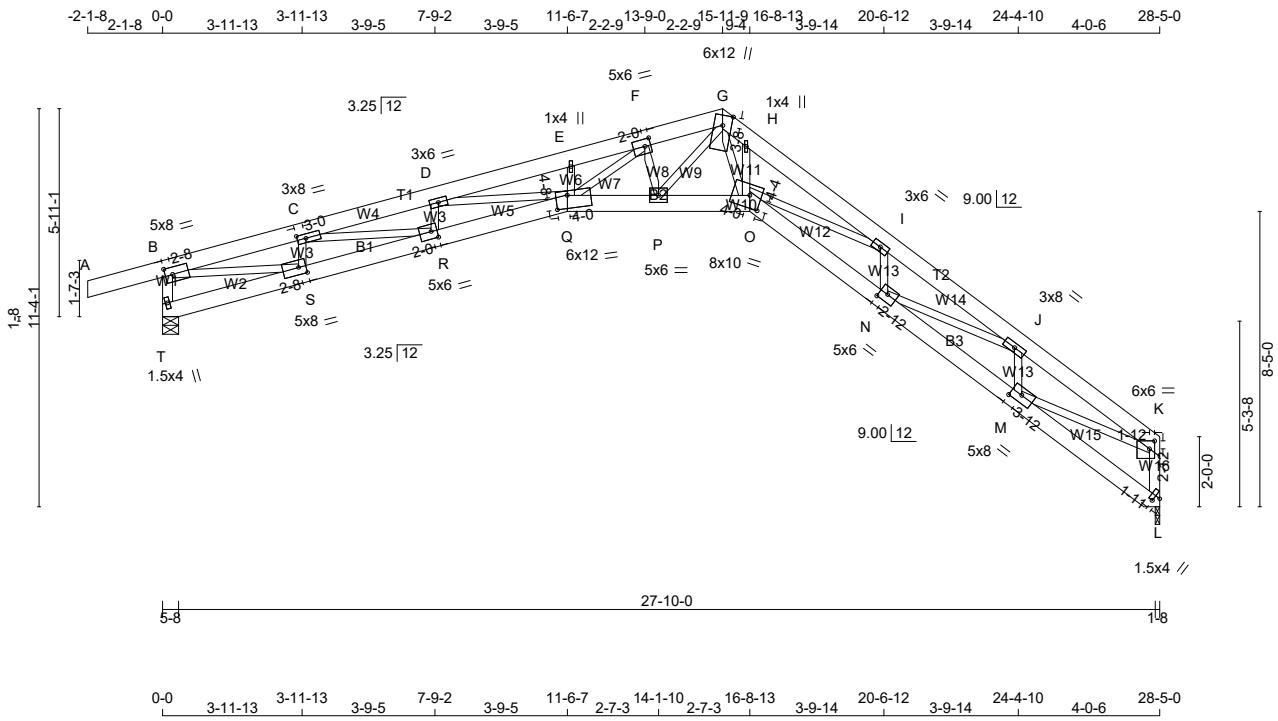

TOTAL WEIGHT = 4 X 153 = 614 lb

[M][F]

LUMBER

N. L. G. A. RULES

CHORDS	SIZE		LUMBER	DESCR.
T - B	2x4	DRY	1650F 1.5E	SPF
A - G	2x6	DRY	1650F 1.5E	SPF
G - K	2x6	DRY	1650F 1.5E	SPF
L - K	2x4	DRY	1650F 1.5E	SPF
T - Q	2x6	DRY	1650F 1.5E	SPF
Q - O	2x6	DRY	1650F 1.5E	SPF

DIMENSIONS, SUPPORTS AND LOADINGS SPECIFIED BY FABRICATOR TO BE VERIFIED BY BUILDING DESIGNER

BEARINGS

	FACTORED GROSS REACTION		MAXIMUM FACTORED GROSS REACTION			INPUT BRG	REQRD BRG
JT	VERT	HORZ	DOWN	HORZ	UPLIFT	IN-SX	IN-SX
T	2816	0	2816	0	0	5-8	1-8
L	2474	0	2474	0	0	1-8	1-8

ALLOW FOR 1.0" OF HORIZONTAL MOVEMENT DUE TO TOTAL LOAD

UNFACTORED REACTIONS

	1ST LCASE	MAX./MIN. COMPONENT REACTIONS					
JT	COMBINED	SNOW	LIVE	PERM.LIVE	WIND	DEAD	SOIL
T	1938	1575 / 0	0 / 0	0 / 0	0 / 0	363 / 0	0 / 0
L	1706	1365 / 0	0 / 0	0 / 0	0 / 0	341 / 0	0 / 0

BEARING MATERIAL TO BE SPF NO.2 OR BETTER AT JOINT(S) T, L

BRACING

TOP CHORD TO BE SHEATHED OR MAX. PURLIN SPACING = 3.74 FT.
MAX. UNBRACED BOTTOM CHORD LENGTH = 6.25 FT OR RIGID CEILING DIRECTLY APPLIED.

ALL PITCH BREAKS AND PERIMETER CORNER JOINTS MUST BE LATERALLY RESTRAINED.

DESIGN CRITERIA

SPECIFIED LOADS:

TOP CH.	LL	=	48.1	PSF
	DL	=	5.0	PSF
BOT CH.	LL	=	0.0	PSF
	DL	=	7.0	PSF
TOTAL LOAD		=	60.0	PSF

SPACING = 24.0 IN. C/C

THIS TRUSS IS DESIGNED FOR RESIDENTIAL OR SMALL BUILDING REQUIREMENTS OF PART 9, NBCC 2015

THIS DESIGN COMPLIES WITH:
- PART 9 OF BCBC 2018 , ABC 2019
- PART 9 OF OBC 2012 (2019 AMENDMENT)
- CSA 086-14
- TPIC 2014

(55 % OF 83.6 P.S.F. G.S.L. PLUS 2.1 P.S.F. RAIN LOAD) EQUALS 48.1 P.S.F. SPECIFIED ROOF LIVE LOAD

ALLOWABLE DEFL.(LL)= L/180 (1.89")
CALCULATED VERT. DEFL.(LL) = L/ 602 (0.57")
ALLOWABLE DEFL.(TL)= L/180 (1.89")
CALCULATED VERT. DEFL.(TL) = L/ 380 (0.90")

CSI: TC=0.28/1.00 (D-E:1) , BC=0.52/1.00 (Q-R:1) , WB=0.73/1.00 (B-S:1) , SSI=0.25/1.00 (G-H:1)

CONTINUED ON PAGE 2

JOB NAME	TRUSS NAME	QUANTITY	PLY	JOB DESC. Woodcreek / Adkins	DRWG NO.
211770	ST10	2	2	TRUSS DESC.	

KAMLOOPS TRUSS LTD., Kamloops, BC V2H 1G3

ID:X2qvwXGfFYBXzZFl6ldjmRzCaiR-xMgV7kCdlvC0YbN799p3C2yZ_GGbnFJsGNZBymzCLV0

GENERAL NOTES

DRY: SEASONED LUMBER.

DESIGN CONSISTS OF **2** TRUSSES BUILT SEPARATELY THEN FASTENED TOGETHER AS FOLLOWS:

CHORDS	#ROWS	SURFACE SPACING (IN)	LOAD(PLF)
TOP CHORDS : (0.122"X3") SPIRAL NAILS			
T- B	1	12	TOP
K- L	1	12	TOP
A- G	2	12	TOP
G- K	2	12	TOP
BOTTOM CHORDS : (0.122"X3") SPIRAL NAILS			
T- Q	2	12	TOP
Q- O	2	12	TOP
O- L	2	12	TOP
WEBS : (0.122"X3") SPIRAL NAILS			
2x3	1	6	

NAILS TO BE DRIVEN FROM ONE SIDE ONLY.

TOP - COMPONENTS ARE LOADED FROM THE TOP AND MUST BE PLACED ON TOP EDGE OF ALL PLIES FOR THE LOAD TO BE TRANSFERRED TO EACH PLY.

PLATES (table is in inches)

JT	TYPE	PLATES	W	LEN	Y	X
B	TMVW-t	MT20	5.0	8.0	2.50	2.50
C	TMWW-t	MT20	3.0	8.0	1.50	3.00
D	TMWW-t	MT20	3.0	6.0		
E	TMW+w	MT20	1.0	4.0		
F	TMWW-t	MT20	5.0	6.0	2.50	2.00
G	TTWW+m	MT20	6.0	12.0	3.50	3.00
H	TMW+w	MT20	1.0	4.0		
I	TMWW-t	MT20	3.0	6.0		
J	TMWW-t	MT20	3.0	8.0		
K	TMVW-p	MT20	6.0	6.0	2.75	1.75
L	BMV1+l	MT20	1.5	4.0	2.00	1.75
M	BMWW-t	MT20	5.0	8.0	2.50	3.75
N	BMWW-t	MT20	5.0	6.0	2.50	2.75
O	BBWWW-m	MT20	8.0	10.0	4.25	4.00
P	BMWW-t	MT20	5.0	6.0		
Q	BBWWW-m	MT20	6.0	12.0	4.50	4.00
R	BMWW-t	MT20	5.0	6.0	2.50	2.00
S	BMWW-t	MT20	5.0	8.0	2.50	2.50
T	BMV1+l	MT20	1.5	4.0		

LOADING

TOTAL LOAD CASES: (4)

CHORDS

MEMB. FR-TO	MAX. FORCE (LBS)	FACTORED VERT. LOAD (PLF) FROM	TO	LC1	MAX CSI (LC)	MAX. UNBRAC LENGTH
T- B	-2718 / 0	0.0	0.0	0.09 (1)	7.74	
A- B	0 / 45	-156.6	-156.6	0.09 (1)	10.00	
B- C	-6737 / 0	-156.6	-156.6	0.10 (1)	5.15	
C- D	-11096 / 0	-156.6	-156.6	0.14 (1)	4.19	
D- E	-13434 / 0	-156.6	-156.6	0.28 (1)	3.74	
E- F	-13290 / 0	-156.6	-156.6	0.22 (1)	3.81	
F- G	-9268 / 0	-156.6	-156.6	0.06 (1)	4.58	
G- H	-10828 / 0	-156.6	-156.6	0.20 (1)	4.17	
H- I	-11400 / 0	-156.6	-156.6	0.26 (1)	4.02	
I- J	-9716 / 0	-156.6	-156.6	0.10 (1)	4.46	
J- K	-5937 / 0	-156.6	-156.6	0.09 (1)	5.41	
L- K	-2404 / 0	0.0	0.0	0.09 (1)	7.81	
T- S	-17 / 0	-17.5	-17.5	0.05 (1)	6.25	
S- R	0 / 6714	-17.5	-17.5	0.36 (1)	10.00	
R- Q	0 / 11127	-17.5	-17.5	0.52 (1)	10.00	
Q- P	0 / 9474	-17.5	-17.5	0.36 (1)	10.00	
P- O	0 / 7171	-17.5	-17.5	0.27 (1)	10.00	
O- N	0 / 9744	-17.5	-17.5	0.44 (1)	10.00	
N- M	0 / 5905	-17.5	-17.5	0.30 (1)	10.00	
M- L	-21 / 0	-17.5	-17.5	0.03 (1)	6.25	

WEBS

MEMB. FR-TO	MAX. FORCE (LBS)	MAX CSI (LC)
B- S	0 / 6502	0.73 (1)
S- C	-1972 / 0	0.14 (1)
C- R	0 / 4223	0.48 (1)
R- D	-1504 / 0	0.11 (1)
D- Q	0 / 2217	0.25 (1)
Q- E	0 / 72	0.01 (4)
Q- F	0 / 4495	0.51 (1)
F- P	-2498 / 0	0.18 (1)
P- G	0 / 2988	0.34 (1)
G- O	0 / 6054	0.68 (1)
O- H	0 / 585	0.07 (1)
O- I	0 / 1277	0.14 (1)
N- I	-1419 / 0	0.10 (1)
N- J	0 / 3155	0.35 (1)
M- J	-2000 / 0	0.15 (1)
M- K	0 / 4973	0.56 (1)

DOL LUMBER=1.00 NAIL=1.00 LS BEND=1.10 COMP=1.10 SHEAR=1.10 TENS= 1.10

COMPANION LIVE LOAD FACTOR = 1.00

TRUSS PLATE MANUFACTURER IS NOT RESPONSIBLE FOR QUALITY CONTROL IN THE TRUSS MANUFACTURING PLANT .

NAIL VALUES

PLATE	GRIP(DRY) (PSI) MAX	MIN	SHEAR (PLI) MAX	MIN	SECTION (PLI) MAX	MIN
MT20	650	371	1747	788	1987	1873

PLATE PLACEMENT TOL. = 0.250 inches

PLATE ROTATION TOL. = 5.0 Deg.

JSI GRIP= 0.90 (R) (INPUT = 0.90)
JSI METAL= 0.92 (Q) (INPUT = 1.00)

JOB NAME	TRUSS NAME	QUANTITY	PLY	JOB DESC. Woodcreek / Adkins	DRWG NO.
211770	ST11	1	2	TRUSS DESC.	

KAMLOOPS TRUSS LTD., Kamloops, BC V2H 1G3

Version 8.420 S Mar 22 2021 MiTek Industries, Inc. Thu May 27 07:07:59 2021 Page 1

ID:X2qvwXGfFYBXzZFl6ldjmRzCaiR-tkoFXPDtGXSknuXVHarXIT1uT3y3F9p9kh2I1fzCLV

Scale = 1:57.7

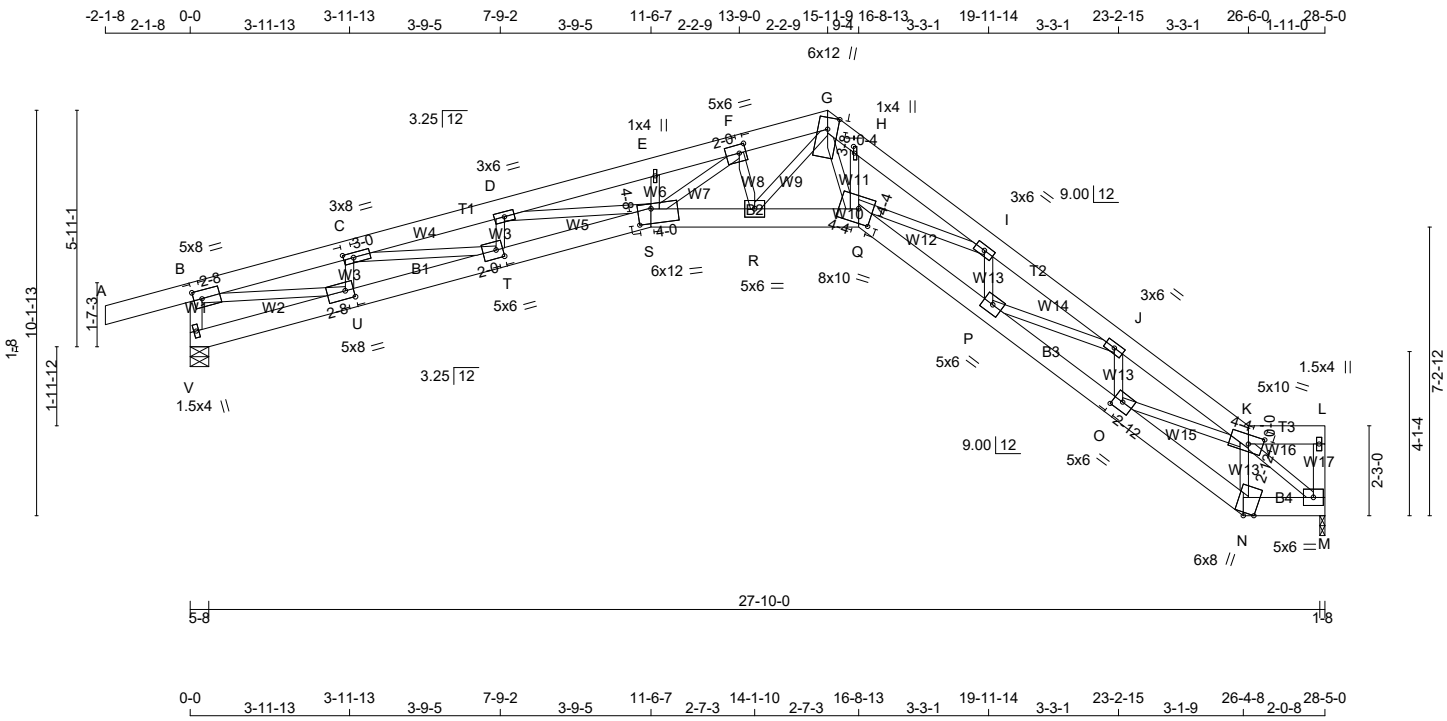

TOTAL WEIGHT = 2 X 153 = 306 lb

[M][F]

LUMBER

N. L. G. A. RULES

CHORDS	SIZE		LUMBER	DESCR.
V - B	2x4	DRY	1650F 1.5E	SPF
A - G	2x6	DRY	1650F 1.5E	SPF
G - K	2x6	DRY	1650F 1.5E	SPF
K - L	2x6	DRY	1650F 1.5E	SPF
M - L	2x4	DRY	1650F 1.5E	SPF
V - S	2x6	DRY	1650F 1.5E	SPF

DIMENSIONS, SUPPORTS AND LOADINGS SPECIFIED BY FABRICATOR TO BE VERIFIED BY BUILDING DESIGNER

BEARINGS

JT	FACTORED GROSS REACTION VERT	HORZ	MAXIMUM GROSS REACTION DOWN	HORZ	UPLIFT	INPUT BRG IN-SX	REQRD BRG IN-SX
V	2816	0	2816	0	0	5-8	1-8
M	2474	0	2474	0	0	1-8	1-8

ALLOW FOR 0.8" OF HORIZONTAL MOVEMENT DUE TO TOTAL LOAD

UNFACTORED REACTIONS

JT	1ST LCASE COMBINED	MAX./MIN. COMPONENT REACTIONS SNOW	LIVE	PERM.LIVE	WIND	DEAD	SOIL
V	1938	1575 / 0	0 / 0	0 / 0	0 / 0	363 / 0	0 / 0
M	1706	1365 / 0	0 / 0	0 / 0	0 / 0	341 / 0	0 / 0

BEARING MATERIAL TO BE SPF NO.2 OR BETTER AT JOINT(S) V

BRACING

TOP CHORD TO BE SHEATHED OR MAX. PURLIN SPACING = 3.74 FT.
MAX. UNBRACED BOTTOM CHORD LENGTH = 6.25 FT OR RIGID CEILING DIRECTLY APPLIED.

ALL PITCH BREAKS AND PERIMETER CORNER JOINTS MUST BE LATERALLY RESTRAINED.

DESIGN CRITERIA

SPECIFIED LOADS:

TOP CH.	LL	=	48.1	PSF
	DL	=	5.0	PSF
BOT CH.	LL	=	0.0	PSF
	DL	=	7.0	PSF
TOTAL LOAD		=	60.0	PSF

SPACING = 24.0 IN. C/C

LOADING IN ALL FLAT SECTIONS BASED ON A SLOPE OF 6.00/12

THIS TRUSS IS DESIGNED FOR RESIDENTIAL OR SMALL BUILDING REQUIREMENTS OF PART 9, NBCC 2015

THIS DESIGN COMPLIES WITH:
- PART 9 OF BCBC 2018 , ABC 2019
- PART 9 OF OBC 2012 (2019 AMENDMENT)
- CSA 086-14
- TPIC 2014

(55 % OF 83.6 P.S.F. G.S.L. PLUS 2.1 P.S.F. RAIN LOAD) EQUALS 48.1 P.S.F. SPECIFIED ROOF LIVE LOAD

ALLOWABLE DEFL.(LL)= L/180 (1.89")
CALCULATED VERT. DEFL.(LL) = L/ 615 (0.55")
ALLOWABLE DEFL.(TL)= L/180 (1.89")
CALCULATED VERT. DEFL.(TL) = L/ 389 (0.88")

CONTINUED ON PAGE 2

JOB NAME	TRUSS NAME	QUANTITY	PLY	JOB DESC. Woodcreek / Adkins	DRWG NO.
211770	ST11	1	2	TRUSS DESC.	

KAMLOOPS TRUSS LTD., Kamloops, BC V2H 1G3

Version 8.420 S Mar 22 2021 MiTek Industries, Inc. Thu May 27 07:08:00 2021 Page 2

ID:X2qvwXGfFYBXzZFl6ldjmRzCaiR-LxMdlIEV1qabP25hrHMmqga3DTIl_c3IyLnrY5zCLUz

DRY: SEASONED LUMBER.

DESIGN CONSISTS OF **2** TRUSSES BUILT SEPARATELY THEN FASTENED TOGETHER AS FOLLOWS:

CHORDS	#ROWS	SURFACE SPACING (IN)	LOAD(PLF)
TOP CHORDS : (0.122"X3") SPIRAL NAILS			
V- B	1	12	TOP
L- M	1	12	TOP
A- G	2	12	TOP
G- K	2	12	TOP
K- L	2	12	TOP
BOTTOM CHORDS : (0.122"X3") SPIRAL NAILS			
V- S	2	12	TOP
S- Q	2	12	TOP
Q- N	2	12	TOP
N- M	2	12	TOP
WEBS : (0.122"X3") SPIRAL NAILS			
2x3	1	6	

NAILS TO BE DRIVEN FROM ONE SIDE ONLY.

TOP - COMPONENTS ARE LOADED FROM THE TOP AND MUST BE PLACED ON TOP EDGE OF ALL PLIES FOR THE LOAD TO BE TRANSFERRED TO EACH PLY.

PLATES (table is in inches)

JT	TYPE	PLATES	W	LEN	Y	X
B	TMVW-t	MT20	5.0	8.0	2.50	2.50
C	TMWW-t	MT20	3.0	8.0	1.50	3.00
D, I, J						
D	TMWW-t	MT20	3.0	6.0		
E	TMW+w	MT20	1.0	4.0		
F	TMWW-t	MT20	5.0	6.0	2.50	2.00
G	TTWW+m	MT20	6.0	12.0	3.50	3.00
H	TMW+w	MT20	1.0	4.0	2.00	0.25
K	TTWWW-m	MT20	5.0	10.0	2.75	4.25
L	TMV+p	MT20	1.5	4.0		
M	BMVW1-t	MT20	5.0	6.0		
N	BBW+m	MT20	6.0	8.0	Edge	
O	BMWW-t	MT20	5.0	6.0	2.50	2.75
P	BMWW-t	MT20	5.0	6.0		
Q	BBWWW-m	MT20	8.0	10.0	4.25	4.25
R	BMWW-t	MT20	5.0	6.0		
S	BBWWW-m	MT20	6.0	12.0	4.50	4.00
T	BMWW-t	MT20	5.0	6.0	2.50	2.00
U	BMWW-t	MT20	5.0	8.0	2.50	2.50
V	BMV1+l	MT20	1.5	4.0		

Edge - INDICATES REFERENCE CORNER OF PLATE TOUCHES EDGE OF CHORD.

LOADING

TOTAL LOAD CASES: (4)

CHORDS

MEMB. FR-TO	MAX. FORCE (LBS)	FACTORED VERT. LOAD (PLF) FROM	TO	LC1	MAX CSI (LC)	MAX. UNBRAC LENGTH
V- B	-2718 / 0	0.0	0.0	0.09 (1)	7.74	
A- B	0 / 45	-156.6	-156.6	0.09 (1)	10.00	
B- C	-6737 / 0	-156.6	-156.6	0.10 (1)	5.15	
C- D	-11096 / 0	-156.6	-156.6	0.14 (1)	4.19	
D- E	-13434 / 0	-156.6	-156.6	0.28 (1)	3.74	
E- F	-13290 / 0	-156.6	-156.6	0.22 (1)	3.81	
F- G	-9267 / 0	-156.6	-156.6	0.06 (1)	4.59	
G- H	-10713 / 0	-156.6	-156.6	0.21 (1)	4.17	
H- I	-11371 / 0	-156.6	-156.6	0.24 (1)	4.04	
I- J	-10092 / 0	-156.6	-156.6	0.10 (1)	4.39	
J- K	-7178 / 0	-156.6	-156.6	0.08 (1)	5.04	
K- L	0 / 0	-156.6	-156.6	0.02 (1)	10.00	
M- L	-150 / 0	0.0	0.0	0.01 (1)	7.81	
V- U	-17 / 0	-17.5	-17.5	0.05 (1)	6.25	
U- T	0 / 6714	-17.5	-17.5	0.36 (1)	10.00	
T- S	0 / 11127	-17.5	-17.5	0.52 (1)	10.00	
S- R	0 / 9473	-17.5	-17.5	0.36 (1)	10.00	
R- Q	0 / 7169	-17.5	-17.5	0.27 (1)	10.00	
Q- P	0 / 10134	-17.5	-17.5	0.45 (1)	10.00	
P- O	0 / 7156	-17.5	-17.5	0.34 (1)	10.00	
O- N	0 / 3009	-17.5	-17.5	0.15 (1)	10.00	
N- M	0 / 2546	-17.5	-17.5	0.10 (1)	10.00	

WEBS

MEMB. FR-TO	MAX. FORCE (LBS)	MAX CSI (LC)
B- U	0 / 6502	0.73 (1)
U- C	-1972 / 0	0.14 (1)
C- T	0 / 4223	0.48 (1)
T- D	-1504 / 0	0.11 (1)
D- S	0 / 2217	0.25 (1)
S- E	0 / 72	0.01 (4)
S- F	0 / 4497	0.51 (1)
F- R	-2500 / 0	0.18 (1)
R- G	0 / 2988	0.34 (1)
G- Q	0 / 5918	0.67 (1)
Q- H	0 / 776	0.09 (1)
Q- I	0 / 889	0.10 (1)
P- I	-1304 / 0	0.10 (1)
P- J	0 / 2390	0.27 (1)
O- J	-1764 / 0	0.13 (1)
O- K	0 / 3392	0.38 (1)
N- K	-1708 / 0	0.12 (1)
K- M	-3459 / 0	0.28 (1)

CSI: TC=0.28/1.00 (D-E:1) , BC=0.52/1.00 (S-T:1) , WB=0.73/1.00 (B-U:1) , SSI=0.28/1.00 (G-H:1)

DOL LUMBER=1.00 NAIL=1.00 LS BEND=1.10 COMP=1.10 SHEAR=1.10 TENS= 1.10

COMPANION LIVE LOAD FACTOR = 1.00

TRUSS PLATE MANUFACTURER IS NOT RESPONSIBLE FOR QUALITY CONTROL IN THE TRUSS MANUFACTURING PLANT .

NAIL VALUES

PLATE	GRIP(DRY) (PSI) MAX	MIN	SHEAR (PLI) MAX	MIN	SECTION (PLI) MAX	MIN
MT20	650	371	1747	788	1987	1873

PLATE PLACEMENT TOL. = 0.250 inches

PLATE ROTATION TOL. = 5.0 Deg.

JSI GRIP= 0.90 (Q) (INPUT = 0.90)
JSI METAL= 0.92 (S) (INPUT = 1.00)

JOB NAME	TRUSS NAME	QUANTITY	PLY	JOB DESC. Woodcreek / Adkins	DRWG NO.
211770	ST12	1	2	TRUSS DESC.	

KAMLOOPS TRUSS LTD., Kamloops, BC V2H 1G3

Version 8.420 S Mar 22 2021 MiTek Industries, Inc. Thu May 27 07:08:02 2021 Page 1

ID:X2qvwXGfFYBXzZFl6ldjmRzCaiR-IJUOARGmZSqJeMF4yiPEv5fPjH mSUwbQfGyd zCLUx

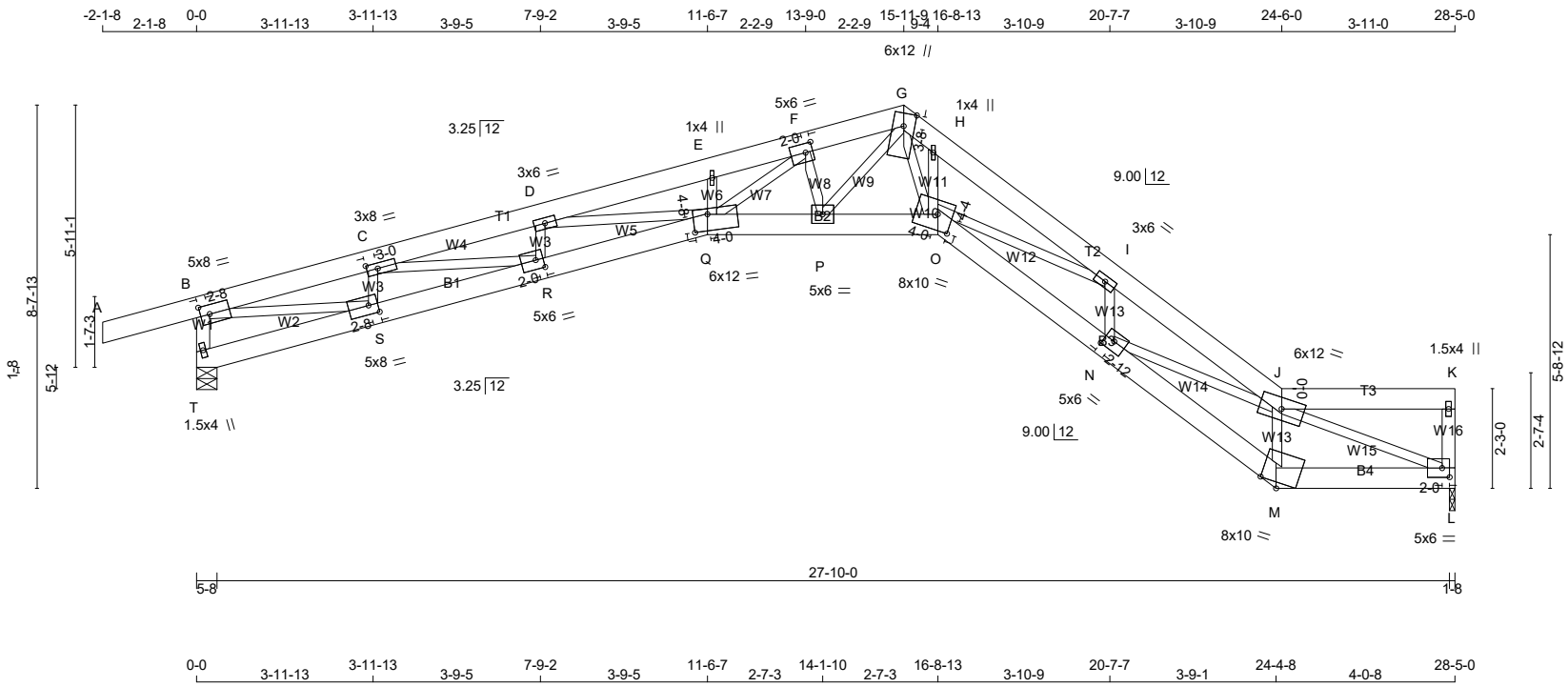

TOTAL WEIGHT = 2 X 150 = 300 lb

[M][F]

LUMBER

N. L. G. A. RULES

CHORDS	SIZE		LUMBER	DESCR.
T - B	2x4	DRY	1650F 1.5E	SPF
A - G	2x6	DRY	1650F 1.5E	SPF
G - J	2x6	DRY	1650F 1.5E	SPF
J - K	2x6	DRY	1650F 1.5E	SPF
L - K	2x4	DRY	1650F 1.5E	SPF
T - Q	2x6	DRY	1650F 1.5E	SPF

DIMENSIONS, SUPPORTS AND LOADINGS SPECIFIED BY FABRICATOR TO BE VERIFIED BY BUILDING DESIGNER

BEARINGS

	FACTORED GROSS REACTION		MAXIMUM FACTORED GROSS REACTION			INPUT BRG	REQRD BRG
JT	VERT	HORZ	DOWN	HORZ	UPLIFT	IN-SX	IN-SX
T	2816	0	2816	0	0	5-8	1-8
L	2474	0	2474	0	0	1-8	1-8

ALLOW FOR 0.7" OF HORIZONTAL MOVEMENT DUE TO TOTAL LOAD

UNFACTORED REACTIONS

	1ST LCASE	MAX./MIN. COMPONENT REACTIONS					
JT	COMBINED	SNOW	LIVE	PERM.LIVE	WIND	DEAD	SOIL
T	1938	1575 / 0	0 / 0	0 / 0	0 / 0	363 / 0	0 / 0
L	1706	1365 / 0	0 / 0	0 / 0	0 / 0	341 / 0	0 / 0

BEARING MATERIAL TO BE SPF NO.2 OR BETTER AT JOINT(S) T

BRACING

TOP CHORD TO BE SHEATHED OR MAX. PURLIN SPACING = 3.74 FT.
MAX. UNBRACED BOTTOM CHORD LENGTH = 6.25 FT OR RIGID CEILING DIRECTLY APPLIED.

ALL PITCH BREAKS AND PERIMETER CORNER JOINTS MUST BE LATERALLY RESTRAINED.

DESIGN CRITERIA

SPECIFIED LOADS:

TOP CH.	LL	=	48.1	PSF
	DL	=	5.0	PSF
BOT CH.	LL	=	0.0	PSF
	DL	=	7.0	PSF
TOTAL LOAD		=	60.0	PSF

SPACING = 24.0 IN. C/C

LOADING IN ALL FLAT SECTIONS BASED ON A SLOPE OF 6.00/12

THIS TRUSS IS DESIGNED FOR RESIDENTIAL OR SMALL BUILDING REQUIREMENTS OF PART 9, NBCC 2015

THIS DESIGN COMPLIES WITH:
- PART 9 OF BCBC 2018 , ABC 2019
- PART 9 OF OBC 2012 (2019 AMENDMENT)
- CSA 086-14
- TPIC 2014

(55 % OF 83.6 P.S.F. G.S.L. PLUS 2.1 P.S.F. RAIN LOAD) EQUALS 48.1 P.S.F. SPECIFIED ROOF LIVE LOAD

ALLOWABLE DEFL.(LL)= L/180 (1.89")
CALCULATED VERT. DEFL.(LL) = L/ 603 (0.57")
ALLOWABLE DEFL.(TL)= L/180 (1.89")
CALCULATED VERT. DEFL.(TL) = L/ 382 (0.89")

CONTINUED ON PAGE 2

JOB NAME	TRUSS NAME	QUANTITY	PLY	JOB DESC. Woodcreek / Adkins	DRWG NO.
211770	ST12	1	2	TRUSS DESC.	

DRY: SEASONED LUMBER.

DESIGN CONSISTS OF **2** TRUSSES BUILT SEPARATELY THEN FASTENED TOGETHER AS FOLLOWS:

CHORDS	#ROWS	SURFACE SPACING (IN)	LOAD(PLF)
TOP CHORDS : (0.122"X3") SPIRAL NAILS			
T- B	1	12	TOP
K- L	1	12	TOP
A- G	2	12	TOP
G- J	2	12	TOP
J- K	2	12	TOP
BOTTOM CHORDS : (0.122"X3") SPIRAL NAILS			
T- Q	2	12	TOP
Q- O	2	12	TOP
O- M	2	12	TOP
M- L	2	12	TOP
WEBS : (0.122"X3") SPIRAL NAILS			
2x3	1	6	

NAILS TO BE DRIVEN FROM ONE SIDE ONLY.

TOP - COMPONENTS ARE LOADED FROM THE TOP AND MUST BE PLACED ON TOP EDGE OF ALL PLIES FOR THE LOAD TO BE TRANSFERRED TO EACH PLY.

PLATES (table is in inches)

JT	TYPE	PLATES	W	LEN	Y	X
B	TMVW-t	MT20	5.0	8.0	2.50	2.50
C	TMWW-t	MT20	3.0	8.0	1.50	3.00
D	TMWW-t	MT20	3.0	6.0		
E	TMW+w	MT20	1.0	4.0		
F	TMWW-t	MT20	5.0	6.0	2.50	2.00
G	TTWW+m	MT20	6.0	12.0	3.50	3.00
H	TMW+w	MT20	1.0	4.0		
I	TMWW-t	MT20	3.0	6.0		
J	TTWWW-m	MT20	6.0	12.0		
K	TMV+p	MT20	1.5	4.0		
L	BMVW1-t	MT20	5.0	6.0	2.50	2.00
M	BBW-m	MT20	8.0	10.0	Edge	
N	BMWW-t	MT20	5.0	6.0	2.50	2.75
O	BBWWW-m	MT20	8.0	10.0	4.25	4.00
P	BMWW-t	MT20	5.0	6.0		
Q	BBWWW-m	MT20	6.0	12.0	4.50	4.00
R	BMWW-t	MT20	5.0	6.0	2.50	2.00
S	BMWW-t	MT20	5.0	8.0	2.50	2.50
T	BMV1+l	MT20	1.5	4.0		

Edge - INDICATES REFERENCE CORNER OF PLATE TOUCHES EDGE OF CHORD.

LOADING

TOTAL LOAD CASES: (4)

CHORDS

MEMB. FR-TO	MAX. FORCE (LBS)	FACTORED VERT. LOAD (PLF) FROM	TO	LC1	MAX CSI (LC)	MAX. UNBRAC LENGTH
T- B	-2718 / 0	0.0	0.0	0.09 (1)	7.74	
A- B	0 / 45	-156.6	-156.6	0.09 (1)	10.00	
B- C	-6737 / 0	-156.6	-156.6	0.10 (1)	5.15	
C- D	-11096 / 0	-156.6	-156.6	0.14 (1)	4.19	
D- E	-13434 / 0	-156.6	-156.6	0.28 (1)	3.74	
E- F	-13290 / 0	-156.6	-156.6	0.22 (1)	3.81	
F- G	-9268 / 0	-156.6	-156.6	0.06 (1)	4.58	
G- H	-10831 / 0	-156.6	-156.6	0.19 (1)	4.17	
H- I	-11397 / 0	-156.6	-156.6	0.26 (1)	4.02	
I- J	-9607 / 0	-156.6	-156.6	0.10 (1)	4.48	
J- K	0 / 0	-156.6	-156.6	0.07 (1)	10.00	
L- K	-307 / 0	0.0	0.0	0.01 (1)	7.81	
T- S	-17 / 0	-17.5	-17.5	0.05 (1)	6.25	
S- R	0 / 6714	-17.5	-17.5	0.36 (1)	10.00	
R- Q	0 / 11127	-17.5	-17.5	0.52 (1)	10.00	
Q- P	0 / 9474	-17.5	-17.5	0.36 (1)	10.00	
P- O	0 / 7169	-17.5	-17.5	0.27 (1)	10.00	
O- N	0 / 9674	-17.5	-17.5	0.45 (1)	10.00	
N- M	0 / 5680	-17.5	-17.5	0.30 (1)	10.00	
M- L	0 / 4811	-17.5	-17.5	0.19 (1)	10.00	

WEBS

MEMB. FR-TO	MAX. FORCE (LBS)	MAX CSI (LC)
B- S	0 / 6502	0.73 (1)
S- C	-1972 / 0	0.14 (1)
C- R	0 / 4223	0.48 (1)
R- D	-1504 / 0	0.11 (1)
D- Q	0 / 2217	0.25 (1)
Q- E	0 / 72	0.01 (4)
Q- F	0 / 4495	0.51 (1)
F- P	-2499 / 0	0.18 (1)
P- G	0 / 2990	0.34 (1)
G- O	0 / 6059	0.68 (1)
O- H	0 / 572	0.06 (1)
O- I	0 / 1343	0.15 (1)
N- I	-1499 / 0	0.11 (1)
N- J	0 / 3269	0.37 (1)
M- J	-3271 / 0	0.24 (1)
J- L	-5276 / 0	0.77 (1)

CSI: TC=0.28/1.00 (D-E:1) , BC=0.52/1.00 (Q-R:1) , WB=0.77/1.00 (J-L:1) , SSI=0.25/1.00 (G-H:1)

DOL LUMBER=1.00 NAIL=1.00 LS BEND=1.10 COMP=1.10 SHEAR=1.10 TENS= 1.10

COMPANION LIVE LOAD FACTOR = 1.00

TRUSS PLATE MANUFACTURER IS NOT RESPONSIBLE FOR QUALITY CONTROL IN THE TRUSS MANUFACTURING PLANT .

NAIL VALUES

PLATE	GRIP(DRY) (PSI) MAX	MIN	SHEAR (PLI) MAX	MIN	SECTION (PLI) MAX	MIN
MT20	650	371	1747	788	1987	1873

PLATE PLACEMENT TOL. = 0.250 inches

PLATE ROTATION TOL. = 5.0 Deg.

JSI GRIP= 0.90 (R) (INPUT = 0.90)
JSI METAL= 0.92 (Q) (INPUT = 1.00)

JOB NAME	TRUSS NAME	QUANTITY	PLY	JOB DESC. Woodcreek / Adkins	DRWG NO.
211770	ST13	1	2	TRUSS DESC.	

KAMLOOPS TRUSS LTD., Kamloops, BC V2H 1G3

Version 8.420 S Mar 22 2021 MiTek Industries, Inc. Thu May 27 07:08:04 2021 Page 1

ID:X2qvwXGfFYBXzZFl6ldjmRzCaiR-Eic8b7H05341ufPT47Ri_WlID4fEwP2utzl3hszCLUv

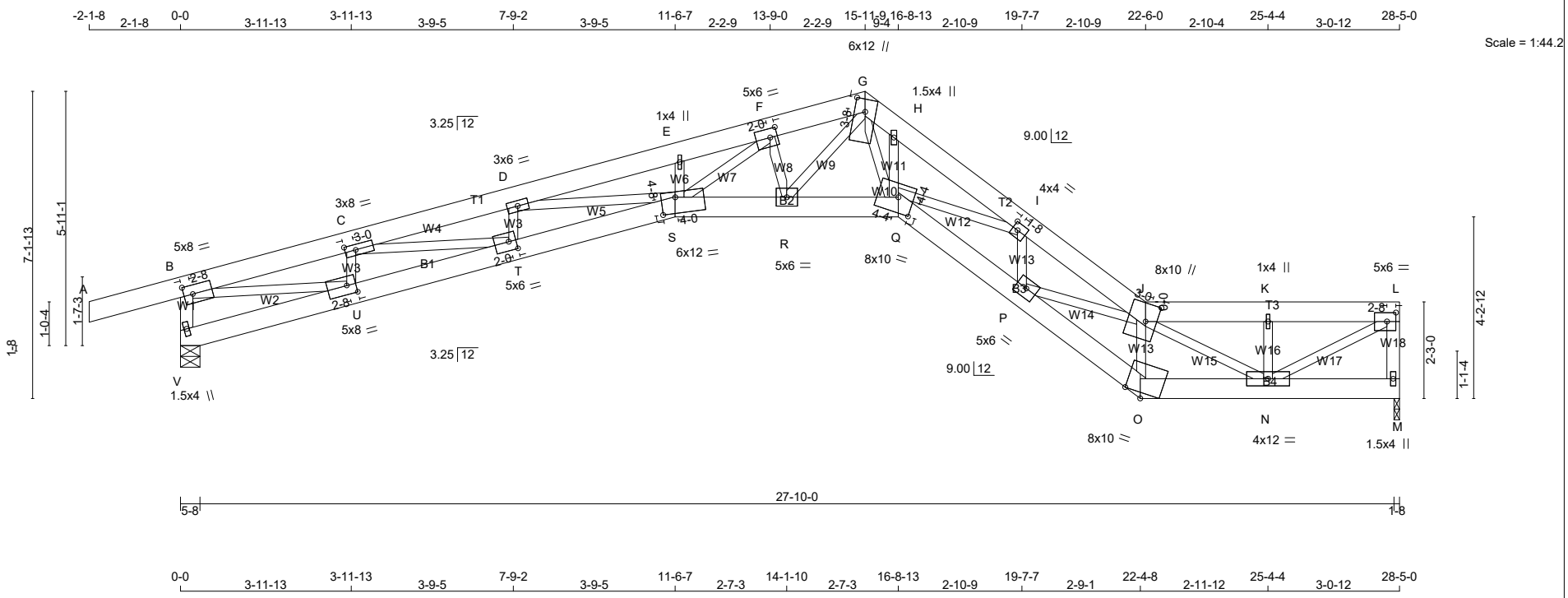

TOTAL WEIGHT = 2 X 149 = 298 lb

[M][F]

LUMBER

N. L. G. A. RULES

CHORDS	SIZE		LUMBER	DESCR.
V - B	2x4	DRY	1650F 1.5E	SPF
A - G	2x6	DRY	1650F 1.5E	SPF
G - J	2x6	DRY	1650F 1.5E	SPF
J - L	2x6	DRY	1650F 1.5E	SPF
M - L	2x4	DRY	1650F 1.5E	SPF
V - S	2x6	DRY	1650F 1.5E	SPF

DIMENSIONS, SUPPORTS AND LOADINGS SPECIFIED BY FABRICATOR TO BE VERIFIED BY BUILDING DESIGNER

BEARINGS

	FACTORED GROSS REACTION		MAXIMUM FACTORED GROSS REACTION			INPUT BRG	REQRD BRG
JT	VERT	HORZ	DOWN	HORZ	UPLIFT	IN-SX	IN-SX
V	2816	0	2816	0	0	5-8	1-8
M	2474	0	2474	0	0	1-8	1-8

ALLOW FOR 0.6" OF HORIZONTAL MOVEMENT DUE TO TOTAL LOAD

UNFACTORED REACTIONS

	1ST LCASE	MAX./MIN. COMPONENT REACTIONS					
JT	COMBINED	SNOW	LIVE	PERM.LIVE	WIND	DEAD	SOIL
V	1938	1575 / 0	0 / 0	0 / 0	0 / 0	363 / 0	0 / 0
M	1706	1365 / 0	0 / 0	0 / 0	0 / 0	341 / 0	0 / 0

BEARING MATERIAL TO BE SPF NO.2 OR BETTER AT JOINT(S) V

BRACING

TOP CHORD TO BE SHEATHED OR MAX. PURLIN SPACING = 3.74 FT.
MAX. UNBRACED BOTTOM CHORD LENGTH = 6.25 FT OR RIGID CEILING DIRECTLY APPLIED.

ALL PITCH BREAKS AND PERIMETER CORNER JOINTS MUST BE LATERALLY RESTRAINED.

DESIGN CRITERIA

SPECIFIED LOADS:

TOP CH.	LL	=	48.1	PSF
	DL	=	5.0	PSF
BOT CH.	LL	=	0.0	PSF
	DL	=	7.0	PSF
TOTAL LOAD		=	60.0	PSF

SPACING = 24.0 IN. C/C

LOADING IN ALL FLAT SECTIONS BASED ON A SLOPE OF 6.00/12

THIS TRUSS IS DESIGNED FOR RESIDENTIAL OR SMALL BUILDING REQUIREMENTS OF PART 9, NBCC 2015

THIS DESIGN COMPLIES WITH:
- PART 9 OF BCBC 2018 , ABC 2019
- PART 9 OF OBC 2012 (2019 AMENDMENT)
- CSA 086-14
- TPIC 2014

(55 % OF 83.6 P.S.F. G.S.L. PLUS 2.1 P.S.F. RAIN LOAD) EQUALS 48.1 P.S.F. SPECIFIED ROOF LIVE LOAD

ALLOWABLE DEFL.(LL)= L/180 (1.89")
CALCULATED VERT. DEFL.(LL) = L/ 619 (0.55")
ALLOWABLE DEFL.(TL)= L/180 (1.89")
CALCULATED VERT. DEFL.(TL) = L/ 391 (0.87")

CONTINUED ON PAGE 2

JOB NAME	TRUSS NAME	QUANTITY	PLY	JOB DESC. Woodcreek / Adkins	DRWG NO.
211770	ST13	1	2	TRUSS DESC.	

KAMLOOPS TRUSS LTD., Kamloops, BC V2H 1G3

ID:X2qvwXGfFYBXzZFI6IdjmRzCaiR-Eic8b7H05341ufPT47Ri_WlID4fEwP2utzl3hszCLUv

DRY: SEASONED LUMBER.

DESIGN CONSISTS OF **2** TRUSSES BUILT SEPARATELY THEN FASTENED TOGETHER AS FOLLOWS:

CHORDS	#ROWS	SURFACE SPACING (IN)	LOAD(PLF)
TOP CHORDS : (0.122"X3") SPIRAL NAILS			
V- B	1	12	TOP
L- M	1	12	TOP
A- G	2	12	TOP
G- J	2	12	TOP
J- L	2	12	TOP
BOTTOM CHORDS : (0.122"X3") SPIRAL NAILS			
V- S	2	12	TOP
S- Q	2	12	TOP
Q- O	2	12	TOP
O- M	2	12	TOP
WEBS : (0.122"X3") SPIRAL NAILS			
2x3	1	6	

NAILS TO BE DRIVEN FROM ONE SIDE ONLY.

TOP - COMPONENTS ARE LOADED FROM THE TOP AND MUST BE PLACED ON TOP EDGE OF ALL PLIES FOR THE LOAD TO BE TRANSFERRED TO EACH PLY.

PLATES (table is in inches)

JT	TYPE	PLATES	W	LEN	Y	X
B	TMVW-t	MT20	5.0	8.0	2.50	2.50
C	TMWW-t	MT20	3.0	8.0	1.50	3.00
D	TMWW-t	MT20	3.0	6.0		
E	TMW+w	MT20	1.0	4.0		
F	TMWW-t	MT20	5.0	6.0	2.50	2.00
G	TTWW+m	MT20	6.0	12.0	3.50	3.00
H	TMW+w	MT20	1.5	4.0		
I	TMWW-t	MT20	4.0	4.0	2.00	1.50
J	TTWWW+m	MT20	8.0	10.0	5.00	3.00
K	TMW+w	MT20	1.0	4.0		
L	TMVW-t	MT20	5.0	6.0	2.50	2.50
M	BMV1+p	MT20	1.5	4.0		
N	BMWWW-t	MT20	4.0	12.0		
O	BBW-m	MT20	8.0	10.0	Edge	
P	BMWW-t	MT20	5.0	6.0		
Q	BBWWW-m	MT20	8.0	10.0	4.25	4.25
R	BMWW-t	MT20	5.0	6.0		
S	BBWWW-m	MT20	6.0	12.0	4.50	4.00
T	BMWW-t	MT20	5.0	6.0	2.50	2.00
U	BMWW-t	MT20	5.0	8.0	2.50	2.50
V	BMV1+l	MT20	1.5	4.0		

Edge - INDICATES REFERENCE CORNER OF PLATE TOUCHES EDGE OF CHORD.

LOADING

TOTAL LOAD CASES: (4)

CHORDS

MEMB. FR-TO	MAX. FORCE (LBS)	FACTORED VERT. LOAD (PLF) FROM	TO	LC1	MAX CSI (LC)	MAX. UNBRAC LENGTH
V- B	-2718 / 0	0.0	0.0	0.09 (1)	7.74	
A- B	0 / 45	-156.6	-156.6	0.09 (1)	10.00	
B- C	-6737 / 0	-156.6	-156.6	0.10 (1)	5.15	
C- D	-11096 / 0	-156.6	-156.6	0.14 (1)	4.19	
D- E	-13434 / 0	-156.6	-156.6	0.28 (1)	3.74	
E- F	-13290 / 0	-156.6	-156.6	0.22 (1)	3.81	
F- G	-9266 / 0	-156.6	-156.6	0.06 (1)	4.59	
G- H	-10650 / 0	-156.6	-156.6	0.21 (1)	4.17	
H- I	-11357 / 0	-156.6	-156.6	0.24 (1)	4.04	
I- J	-10235 / 0	-156.6	-156.6	0.08 (1)	4.38	
J- K	-3663 / 0	-156.6	-156.6	0.03 (1)	6.25	
K- L	-3663 / 0	-156.6	-156.6	0.04 (1)	6.25	
M- L	-2379 / 0	0.0	0.0	0.08 (1)	7.81	
V- U	-17 / 0	-17.5	-17.5	0.05 (1)	6.25	
U- T	0 / 6714	-17.5	-17.5	0.36 (1)	10.00	
T- S	0 / 11127	-17.5	-17.5	0.52 (1)	10.00	
S- R	0 / 9472	-17.5	-17.5	0.36 (1)	10.00	
R- Q	0 / 7169	-17.5	-17.5	0.27 (1)	10.00	
Q- P	0 / 10310	-17.5	-17.5	0.48 (1)	10.00	
P- O	0 / 7881	-17.5	-17.5	0.39 (1)	10.00	
O- N	0 / 6671	-17.5	-17.5	0.30 (1)	10.00	
N- M	0 / 0	-17.5	-17.5	0.05 (1)	10.00	

WEBS

MEMB. FR-TO	MAX. FORCE (LBS)	MAX CSI (LC)
B- U	0 / 6502	0.73 (1)
U- C	-1972 / 0	0.14 (1)
C- T	0 / 4223	0.48 (1)
T- D	-1504 / 0	0.11 (1)
D- S	0 / 2217	0.25 (1)
S- E	0 / 72	0.01 (4)
S- F	0 / 4498	0.51 (1)
F- R	-2501 / 0	0.18 (1)
R- G	0 / 2987	0.34 (1)
G- Q	0 / 5841	0.66 (1)
Q- H	0 / 889	0.10 (1)
Q- I	0 / 725	0.08 (1)
P- I	-1270 / 0	0.09 (1)
P- J	0 / 1886	0.21 (1)
O- J	-4500 / 0	0.33 (1)
J- N	-3534 / 0	0.38 (1)
N- K	-436 / 0	0.03 (1)
N- L	0 / 4244	0.48 (1)

CSI: TC=0.28/1.00 (D-E:1) , BC=0.52/1.00 (S-T:1) , WB=0.73/1.00 (B-U:1) , SSI=0.29/1.00 (G-H:1)

DOL LUMBER=1.00 NAIL=1.00 LS BEND=1.10 COMP=1.10 SHEAR=1.10 TENS= 1.10

COMPANION LIVE LOAD FACTOR = 1.00

TRUSS PLATE MANUFACTURER IS NOT RESPONSIBLE FOR QUALITY CONTROL IN THE TRUSS MANUFACTURING PLANT .

NAIL VALUES

PLATE	GRIP(DRY) (PSI) MAX	MIN	SHEAR (PLI) MAX	MIN	SECTION (PLI) MAX	MIN
MT20	650	371	1747	788	1987	1873

PLATE PLACEMENT TOL. = 0.250 inches

PLATE ROTATION TOL. = 5.0 Deg.

JSI GRIP= 0.90 (T) (INPUT = 0.90)
JSI METAL= 0.92 (S) (INPUT = 1.00)

JOB NAME	TRUSS NAME	QUANTITY	PLY	JOB DESC. Woodcreek / Adkins	DRWG NO.
211770	ST14	1	2	TRUSS DESC.	

KAMLOOPS TRUSS LTD., Kamloops, BC V2H 1G3

ID:X2qvwXGfFYBXzZFl6ldjmRzCaiR-eHHHD8KuO_Tcl782lF_Pc9NGSIhx7moKZw_jIBzCLUs

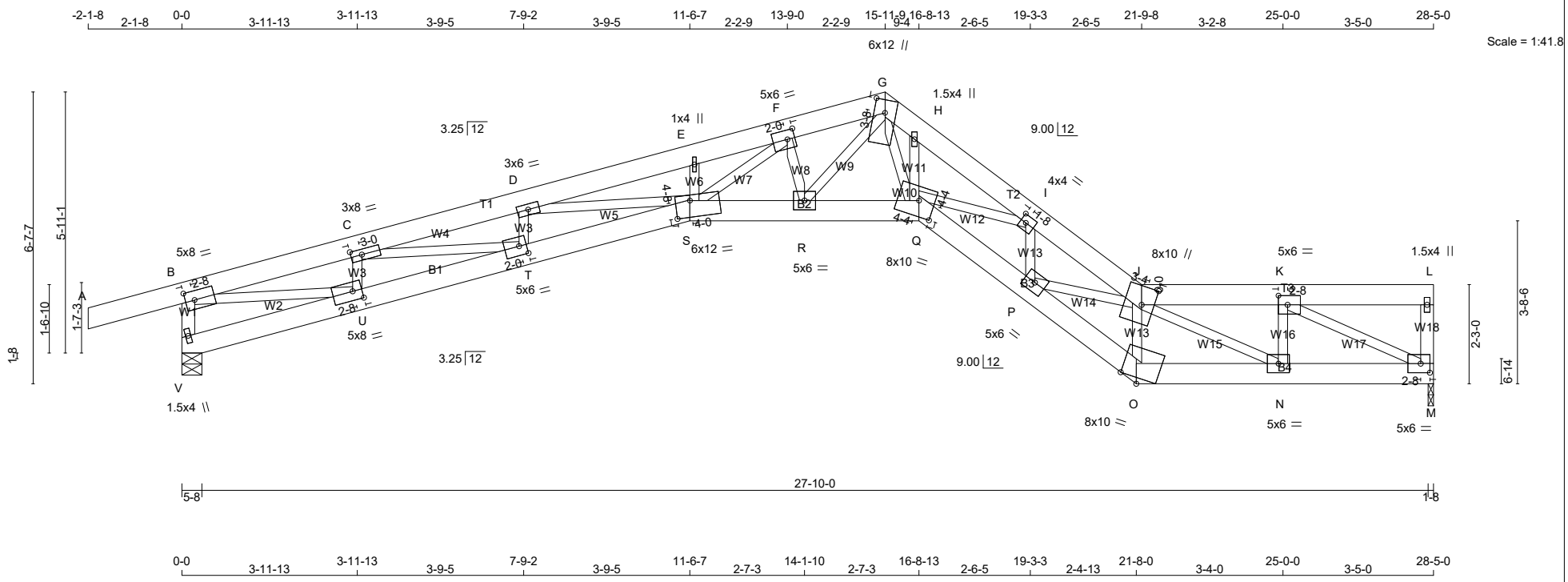

TOTAL WEIGHT = 2 X 148 = 297 lb

[M][F]

LUMBER

N. L. G. A. RULES

CHORDS	SIZE		LUMBER	DESCR.
V - B	2x4	DRY	1650F 1.5E	SPF
A - G	2x6	DRY	1650F 1.5E	SPF
G - J	2x6	DRY	1650F 1.5E	SPF
J - L	2x6	DRY	1650F 1.5E	SPF
M - L	2x4	DRY	1650F 1.5E	SPF
V - S	2x6	DRY	1650F 1.5E	SPF

DIMENSIONS, SUPPORTS AND LOADINGS SPECIFIED BY FABRICATOR TO BE VERIFIED BY BUILDING DESIGNER

BEARINGS

JT	FACTORED GROSS REACTION VERT	HORZ	MAXIMUM GROSS REACTION DOWN	HORZ	UPLIFT	INPUT BRG IN-SX	REQRD BRG IN-SX
V	2816	0	2816	0	0	5-8	1-8
M	2474	0	2474	0	0	1-8	1-8

ALLOW FOR 0.5" OF HORIZONTAL MOVEMENT DUE TO TOTAL LOAD

UNFACTORED REACTIONS

JT	1ST LCASE COMBINED	MAX./MIN. COMPONENT REACTIONS SNOW	LIVE	PERM.LIVE	WIND	DEAD	SOIL
V	1938	1575 / 0	0 / 0	0 / 0	0 / 0	363 / 0	0 / 0
M	1706	1365 / 0	0 / 0	0 / 0	0 / 0	341 / 0	0 / 0

BEARING MATERIAL TO BE SPF NO.2 OR BETTER AT JOINT(S) V

BRACING

TOP CHORD TO BE SHEATHED OR MAX. PURLIN SPACING = 3.74 FT.
MAX. UNBRACED BOTTOM CHORD LENGTH = 6.25 FT OR RIGID CEILING DIRECTLY APPLIED.

ALL PITCH BREAKS AND PERIMETER CORNER JOINTS MUST BE LATERALLY RESTRAINED.

DESIGN CRITERIA

SPECIFIED LOADS:

TOP CH.	LL	=	48.1	PSF
	DL	=	5.0	PSF
BOT CH.	LL	=	0.0	PSF
	DL	=	7.0	PSF
TOTAL LOAD		=	60.0	PSF

SPACING = 24.0 IN. C/C

LOADING IN ALL FLAT SECTIONS BASED ON A SLOPE OF 6.00/12

THIS TRUSS IS DESIGNED FOR RESIDENTIAL OR SMALL BUILDING REQUIREMENTS OF PART 9, NBCC 2015

THIS DESIGN COMPLIES WITH:
- PART 9 OF BCBC 2018 , ABC 2019
- PART 9 OF OBC 2012 (2019 AMENDMENT)
- CSA 086-14
- TPIC 2014

(55 % OF 83.6 P.S.F. G.S.L. PLUS 2.1 P.S.F. RAIN LOAD) EQUALS 48.1 P.S.F. SPECIFIED ROOF LIVE LOAD

ALLOWABLE DEFL.(LL)= L/180 (1.89")
CALCULATED VERT. DEFL.(LL) = L/ 619 (0.55")
ALLOWABLE DEFL.(TL)= L/180 (1.89")
CALCULATED VERT. DEFL.(TL) = L/ 391 (0.87")

CONTINUED ON PAGE 2

JOB NAME	TRUSS NAME	QUANTITY	PLY	JOB DESC. Woodcreek / Adkins	DRWG NO.
211770	ST14	1	2	TRUSS DESC.	

KAMLOOPS TRUSS LTD., Kamloops, BC V2H 1G3

ID:X2qvwXGfFYBXzZFl6ldjmRzCaiR-eHHHD8KuO_Tcl782lF_Pc9NGSIhx7moKZw_jIBzCLUs

DRY: SEASONED LUMBER.

DESIGN CONSISTS OF **2** TRUSSES BUILT SEPARATELY THEN FASTENED TOGETHER AS FOLLOWS:

CHORDS	#ROWS	SURFACE SPACING (IN)	LOAD(PLF)
TOP CHORDS : (0.122"X3") SPIRAL NAILS			
V- B	1	12	TOP
L- M	1	12	TOP
A- G	2	12	TOP
G- J	2	12	TOP
J- L	2	12	TOP
BOTTOM CHORDS : (0.122"X3") SPIRAL NAILS			
V- S	2	12	TOP
S- Q	2	12	TOP
Q- O	2	12	TOP
O- M	2	12	TOP
WEBS : (0.122"X3") SPIRAL NAILS			
2x3	1	6	

NAILS TO BE DRIVEN FROM ONE SIDE ONLY.

TOP - COMPONENTS ARE LOADED FROM THE TOP AND MUST BE PLACED ON TOP EDGE OF ALL PLIES FOR THE LOAD TO BE TRANSFERRED TO EACH PLY.

PLATES (table is in inches)

JT	TYPE	PLATES	W	LEN	Y	X
B	TMVW-t	MT20	5.0	8.0	2.50	2.50
C	TMWW-t	MT20	3.0	8.0	1.50	3.00
D	TMWW-t	MT20	3.0	6.0		
E	TMW+w	MT20	1.0	4.0		
F	TMWW-t	MT20	5.0	6.0	2.50	2.00
G	TTWW+m	MT20	6.0	12.0	3.50	3.00
H	TMW+w	MT20	1.5	4.0		
I	TMWW-t	MT20	4.0	4.0	2.00	1.50
J	TTWWW+m	MT20	8.0	10.0	5.00	3.25
K	TMWW-t	MT20	5.0	6.0	2.50	2.50
L	TMV+p	MT20	1.5	4.0		
M	BMVW1-t	MT20	5.0	6.0	2.50	2.50
N, P, R						
N	BMWW-t	MT20	5.0	6.0		
O	BBW-m	MT20	8.0	10.0	Edge	
Q	BBWWW-m	MT20	8.0	10.0	4.25	4.25
S	BBWWW-m	MT20	6.0	12.0	4.50	4.00
T	BMWW-t	MT20	5.0	6.0	2.50	2.00
U	BMWW-t	MT20	5.0	8.0	2.50	2.50
V	BMV1+l	MT20	1.5	4.0		

Edge - INDICATES REFERENCE CORNER OF PLATE TOUCHES EDGE OF CHORD.

LOADING

TOTAL LOAD CASES: (4)

CHORDS

MEMB. FR-TO	MAX. FORCE (LBS)	FACTORED VERT. LOAD (PLF) FROM	TO	LC1	MAX CSI (LC)	MAX. UNBRAC LENGTH
V- B	-2718 / 0	0.0	0.0	0.09 (1)	7.74	
A- B	0 / 45	-156.6	-156.6	0.09 (1)	10.00	
B- C	-6737 / 0	-156.6	-156.6	0.10 (1)	5.15	
C- D	-11096 / 0	-156.6	-156.6	0.14 (1)	4.19	
D- E	-13434 / 0	-156.6	-156.6	0.28 (1)	3.74	
E- F	-13290 / 0	-156.6	-156.6	0.22 (1)	3.81	
F- G	-9265 / 0	-156.6	-156.6	0.06 (1)	4.59	
G- H	-10578 / 0	-156.6	-156.6	0.22 (1)	4.18	
H- I	-11351 / 0	-156.6	-156.6	0.24 (1)	4.04	
I- J	-10425 / 0	-156.6	-156.6	0.08 (1)	4.35	
J- K	-4066 / 0	-156.6	-156.6	0.04 (1)	6.25	
K- L	0 / 0	-156.6	-156.6	0.05 (1)	10.00	
M- L	-249 / 0	0.0	0.0	0.01 (1)	7.81	
V- U	-17 / 0	-17.5	-17.5	0.05 (1)	6.25	
U- T	0 / 6714	-17.5	-17.5	0.36 (1)	10.00	
T- S	0 / 11127	-17.5	-17.5	0.52 (1)	10.00	
S- R	0 / 9471	-17.5	-17.5	0.36 (1)	10.00	
R- Q	0 / 7169	-17.5	-17.5	0.27 (1)	10.00	
Q- P	0 / 10508	-17.5	-17.5	0.49 (1)	10.00	
P- O	0 / 8542	-17.5	-17.5	0.42 (1)	10.00	
O- N	0 / 7236	-17.5	-17.5	0.32 (1)	10.00	
N- M	0 / 4066	-17.5	-17.5	0.20 (1)	10.00	

WEBS

MEMB. FR-TO	MAX. FORCE (LBS)	MAX CSI (LC)
B- U	0 / 6502	0.73 (1)
U- C	-1972 / 0	0.14 (1)
C- T	0 / 4223	0.48 (1)
T- D	-1504 / 0	0.11 (1)
D- S	0 / 2217	0.25 (1)
S- E	0 / 73	0.01 (4)
S- F	0 / 4499	0.51 (1)
F- R	-2501 / 0	0.18 (1)
R- G	0 / 2985	0.34 (1)
G- Q	0 / 5756	0.65 (1)
Q- H	0 / 1028	0.12 (1)
Q- I	0 / 540	0.06 (1)
P- I	-1197 / 0	0.09 (1)
P- J	0 / 1487	0.17 (1)
O- J	-4896 / 0	0.36 (1)
J- N	-3616 / 0	0.44 (1)
N- K	0 / 1611	0.18 (1)
K- M	-4591 / 0	0.54 (1)

CSI: TC=0.28/1.00 (D-E:1) , BC=0.52/1.00 (S-T:1) , WB=0.73/1.00 (B-U:1) , SSI=0.30/1.00 (G-H:1)

DOL LUMBER=1.00 NAIL=1.00 LS BEND=1.10 COMP=1.10 SHEAR=1.10 TENS= 1.10

COMPANION LIVE LOAD FACTOR = 1.00

TRUSS PLATE MANUFACTURER IS NOT RESPONSIBLE FOR QUALITY CONTROL IN THE TRUSS MANUFACTURING PLANT .

NAIL VALUES

PLATE	GRIP(DRY) (PSI) MAX	MIN	SHEAR (PLI) MAX	MIN	SECTION (PLI) MAX	MIN
MT20	650	371	1747	788	1987	1873

PLATE PLACEMENT TOL. = 0.250 inches

PLATE ROTATION TOL. = 5.0 Deg.

JSI GRIP= 0.90 (T) (INPUT = 0.90)
JSI METAL= 0.92 (S) (INPUT = 1.00)

JOB NAME	TRUSS NAME	QUANTITY	PLY	JOB DESC. Woodcreek / Adkins	DRWG NO.
211770	ST15	1	2	TRUSS DESC.	

KAMLOOPS TRUSS LTD., Kamloops, BC V2H 1G3

Version 8.420 S Mar 22 2021 MiTek Industries, Inc. Thu May 27 07:08:09 2021 Page 1

ID:X2qvwXGfFYBXzZFl6ldjmRzCaiR-bfP1eqL9wbjJ_RHQsg1thaScy5NPbgHd1ETqN4zCLUq

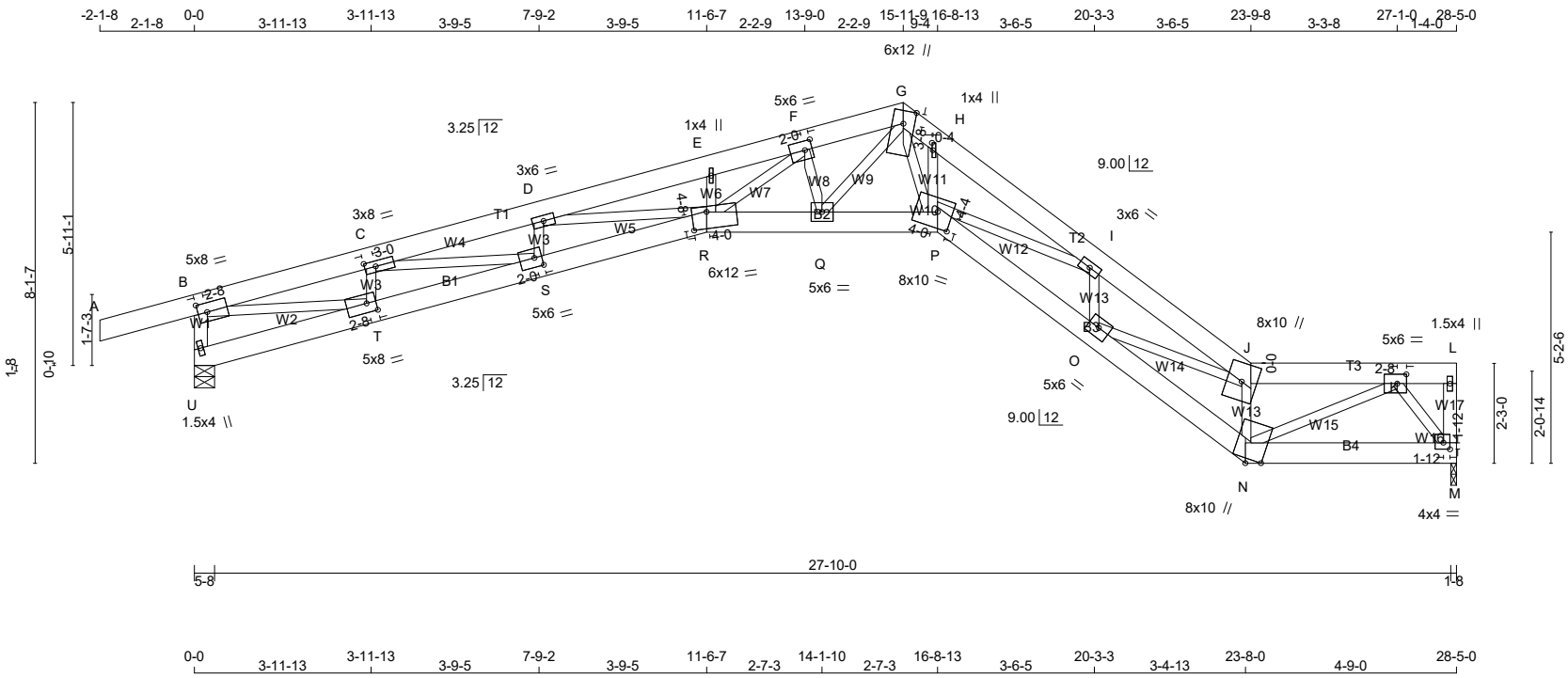

TOTAL WEIGHT = 2 X 150 = 300 lb

[M][F]

LUMBER

N. L. G. A. RULES

CHORDS	SIZE		LUMBER	DESCR.
U - B	2x4	DRY	1650F 1.5E	SPF
A - G	2x6	DRY	1650F 1.5E	SPF
G - J	2x6	DRY	1650F 1.5E	SPF
J - L	2x6	DRY	1650F 1.5E	SPF
M - L	2x4	DRY	1650F 1.5E	SPF
U - R	2x6	DRY	1650F 1.5E	SPF

DIMENSIONS, SUPPORTS AND LOADINGS SPECIFIED BY FABRICATOR TO BE VERIFIED BY BUILDING DESIGNER

BEARINGS

	FACTORED GROSS REACTION		MAXIMUM FACTORED GROSS REACTION			INPUT BRG	REQRD BRG
JT	VERT	HORZ	DOWN	HORZ	UPLIFT	IN-SX	IN-SX
U	2816	0	2816	0	0	5-8	1-8
M	2474	0	2474	0	0	1-8	1-8

ALLOW FOR 0.6" OF HORIZONTAL MOVEMENT DUE TO TOTAL LOAD

UNFACTORED REACTIONS

	1ST LCASE	MAX./MIN. COMPONENT REACTIONS					
JT	COMBINED	SNOW	LIVE	PERM.LIVE	WIND	DEAD	SOIL
U	1938	1575 / 0	0 / 0	0 / 0	0 / 0	363 / 0	0 / 0
M	1706	1365 / 0	0 / 0	0 / 0	0 / 0	341 / 0	0 / 0

BEARING MATERIAL TO BE SPF NO.2 OR BETTER AT JOINT(S) U

BRACING

TOP CHORD TO BE SHEATHED OR MAX. PURLIN SPACING = 3.74 FT.
MAX. UNBRACED BOTTOM CHORD LENGTH = 6.25 FT OR RIGID CEILING DIRECTLY APPLIED.

ALL PITCH BREAKS AND PERIMETER CORNER JOINTS MUST BE LATERALLY RESTRAINED.

DESIGN CRITERIA

SPECIFIED LOADS:

TOP CH.	LL	=	48.1	PSF
	DL	=	5.0	PSF
BOT CH.	LL	=	0.0	PSF
	DL	=	7.0	PSF
TOTAL LOAD		=	60.0	PSF

SPACING = 24.0 IN. C/C

LOADING IN ALL FLAT SECTIONS BASED ON A SLOPE OF 6.00/12

THIS TRUSS IS DESIGNED FOR RESIDENTIAL OR SMALL BUILDING REQUIREMENTS OF PART 9, NBCC 2015

THIS DESIGN COMPLIES WITH:
- PART 9 OF BCBC 2018 , ABC 2019
- PART 9 OF OBC 2012 (2019 AMENDMENT)
- CSA 086-14
- TPIC 2014

(55 % OF 83.6 P.S.F. G.S.L. PLUS 2.1 P.S.F. RAIN LOAD) EQUALS 48.1 P.S.F. SPECIFIED ROOF LIVE LOAD

ALLOWABLE DEFL.(LL)= L/180 (1.89")
CALCULATED VERT. DEFL.(LL) = L/ 608 (0.56")
ALLOWABLE DEFL.(TL)= L/180 (1.89")
CALCULATED VERT. DEFL.(TL) = L/ 384 (0.89")

CONTINUED ON PAGE 2

JOB NAME	TRUSS NAME	QUANTITY	PLY	JOB DESC. Woodcreek / Adkins	DRWG NO.
211770	ST15	1	2	TRUSS DESC.	

KAMLOOPS TRUSS LTD., Kamloops, BC V2H 1G3

ID:X2qvwXGfFYBXzZFl6ldjmRzCaiR-bfP1eqL9wbjJ_RHQsg1thaScy5NPbgHd1ETqN4zCLUq

[illegible]

DRY: SEASONED LUMBER.

DESIGN CONSISTS OF **2** TRUSSES BUILT SEPARATELY THEN FASTENED TOGETHER AS FOLLOWS:

CHORDS	#ROWS	SURFACE SPACING (IN)	LOAD(PLF)
TOP CHORDS : (0.122"X3") SPIRAL NAILS			
U- B	1	12	TOP
L- M	1	12	TOP
A- G	2	12	TOP
G- J	2	12	TOP
J- L	2	12	TOP
BOTTOM CHORDS : (0.122"X3") SPIRAL NAILS			
U- R	2	12	TOP
R- P	2	12	TOP
P- N	2	12	TOP
N- M	2	12	TOP
WEBS : (0.122"X3") SPIRAL NAILS			
2x3	1	6	

NAILS TO BE DRIVEN FROM ONE SIDE ONLY.

TOP - COMPONENTS ARE LOADED FROM THE TOP AND MUST BE PLACED ON TOP EDGE OF ALL PLIES FOR THE LOAD TO BE TRANSFERRED TO EACH PLY.

PLATES (table is in inches)

JT	TYPE	PLATES	W	LEN	Y	X
B	TMVW-t	MT20	5.0	8.0	2.50	2.50
C	TMWW-t	MT20	3.0	8.0	1.50	3.00
D	TMWW-t	MT20	3.0	6.0		
E	TMW+w	MT20	1.0	4.0		
F	TMWW-t	MT20	5.0	6.0	2.50	2.00
G	TTWW+m	MT20	6.0	12.0	3.50	3.00
H	TMW+w	MT20	1.0	4.0	2.00	0.25
I	TMWW-t	MT20	3.0	6.0		
J	TTWW+m	MT20	8.0	10.0		
K	TMWW-t	MT20	5.0	6.0	2.50	2.50
L	TMV+p	MT20	1.5	4.0		
M	BMVW1-t	MT20	4.0	4.0	1.75	1.75
N	BBWW+m	MT20	8.0	10.0	Edge	
O	BMWW-t	MT20	5.0	6.0		
P	BBWWW-m	MT20	8.0	10.0	4.25	4.00
Q	BMWW-t	MT20	5.0	6.0		
R	BBWWW-m	MT20	6.0	12.0	4.50	4.00
S	BMWW-t	MT20	5.0	6.0	2.50	2.00
T	BMWW-t	MT20	5.0	8.0	2.50	2.50
U	BMV1+l	MT20	1.5	4.0		

Edge - INDICATES REFERENCE CORNER OF PLATE TOUCHES EDGE OF CHORD.

LOADING

TOTAL LOAD CASES: (4)

CHORDS

MEMB. FR-TO	MAX. FORCE (LBS)	FACTORED VERT. LOAD (PLF) FROM	TO	LC1	MAX CSI (LC)	MAX. UNBRAC LENGTH
U- B	-2718 / 0	0.0	0.0	0.09 (1)	7.74	
A- B	0 / 45	-156.6	-156.6	0.09 (1)	10.00	
B- C	-6737 / 0	-156.6	-156.6	0.10 (1)	5.15	
C- D	-11096 / 0	-156.6	-156.6	0.14 (1)	4.19	
D- E	-13434 / 0	-156.6	-156.6	0.28 (1)	3.74	
E- F	-13290 / 0	-156.6	-156.6	0.22 (1)	3.81	
F- G	-9267 / 0	-156.6	-156.6	0.06 (1)	4.59	
G- H	-10769 / 0	-156.6	-156.6	0.20 (1)	4.17	
H- I	-11380 / 0	-156.6	-156.6	0.26 (1)	4.02	
I- J	-9834 / 0	-156.6	-156.6	0.09 (1)	4.44	
J- K	-5658 / 0	-156.6	-156.6	0.07 (1)	5.52	
K- L	0 / 0	-156.6	-156.6	0.07 (1)	10.00	
M- L	0 / 117	0.0	0.0	0.01 (1)	10.00	
U- T	-17 / 0	-17.5	-17.5	0.05 (1)	6.25	
T- S	0 / 6714	-17.5	-17.5	0.36 (1)	10.00	
S- R	0 / 11127	-17.5	-17.5	0.52 (1)	10.00	
R- Q	0 / 9473	-17.5	-17.5	0.36 (1)	10.00	
Q- P	0 / 7169	-17.5	-17.5	0.27 (1)	10.00	
P- O	0 / 9905	-17.5	-17.5	0.46 (1)	10.00	
O- N	0 / 6513	-17.5	-17.5	0.34 (1)	10.00	
N- M	0 / 1906	-17.5	-17.5	0.08 (1)	10.00	

WEBS

MEMB. FR-TO	MAX. FORCE (LBS)	MAX CSI (LC)
B- T	0 / 6502	0.73 (1)
T- C	-1972 / 0	0.14 (1)
C- S	0 / 4223	0.48 (1)
S- D	-1504 / 0	0.11 (1)
D- R	0 / 2217	0.25 (1)
R- E	0 / 72	0.01 (4)
R- F	0 / 4496	0.51 (1)
F- Q	-2500 / 0	0.18 (1)
Q- G	0 / 2989	0.34 (1)
G- P	0 / 5985	0.67 (1)
P- H	0 / 676	0.08 (1)
P- I	0 / 1116	0.13 (1)
O- I	-1419 / 0	0.10 (1)
O- J	0 / 2728	0.31 (1)
N- J	-5728 / 0	0.42 (1)
N- K	0 / 4223	0.48 (1)
K- M	-3192 / 0	0.24 (1)

CSI: TC=0.28/1.00 (D-E:1) , BC=0.52/1.00 (R-S:1) , WB=0.73/1.00 (B-T:1) , SSI=0.26/1.00 (G-H:1)

DOL LUMBER=1.00 NAIL=1.00 LS BEND=1.10 COMP=1.10 SHEAR=1.10 TENS= 1.10

COMPANION LIVE LOAD FACTOR = 1.00

TRUSS PLATE MANUFACTURER IS NOT RESPONSIBLE FOR QUALITY CONTROL IN THE TRUSS MANUFACTURING PLANT .

NAIL VALUES

PLATE	GRIP(DRY) (PSI) MAX	MIN	SHEAR (PLI) MAX	MIN	SECTION (PLI) MAX	MIN
MT20	650	371	1747	788	1987	1873

PLATE PLACEMENT TOL. = 0.250 inches

PLATE ROTATION TOL. = 5.0 Deg.

JSI GRIP= 0.90 (S) (INPUT = 0.90)
JSI METAL= 0.92 (R) (INPUT = 1.00)

JOB NAME	TRUSS NAME	QUANTITY	PLY	JOB DESC. Woodcreek / Adkins	DRWG NO.
211770	ST16	1	2	TRUSS DESC.	

KAMLOOPS TRUSS LTD., Kamloops, BC V2H 1G3

Version 8.420 S Mar 22 2021 MiTek Industries, Inc. Thu May 27 07:08:11 2021 Page 1

ID:X2qvwXGfFYBXzZFl6ldjmRzCaiR-X2Xo3WNPSDz1DkRp_53Ln?XyQv2s3aVwUYyxRyzCLUo

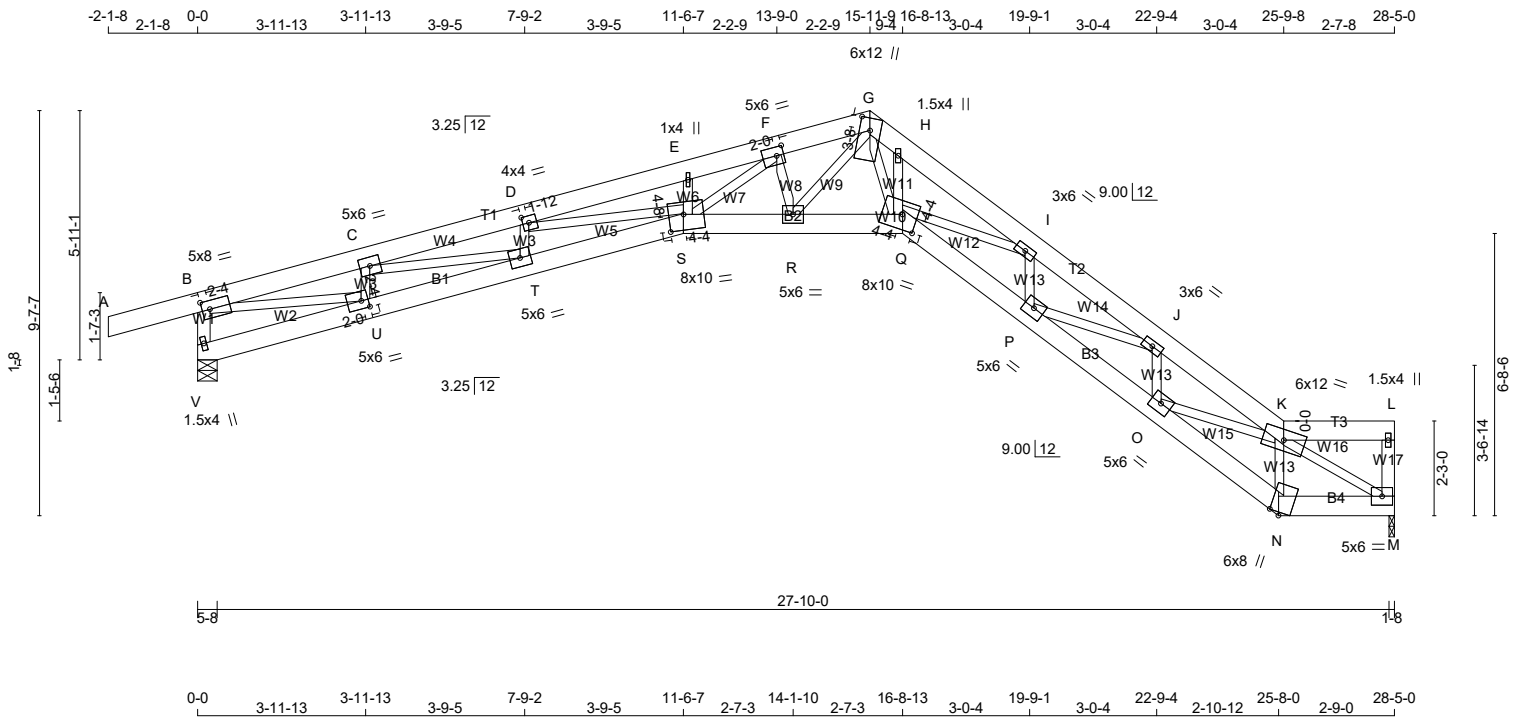

TOTAL WEIGHT = 2 X 152 = 304 lb

[M][F]

LUMBER

N. L. G. A. RULES

CHORDS	SIZE		LUMBER	DESCR.
V - B	2x4	DRY	1650F 1.5E	SPF
A - G	2x6	DRY	1650F 1.5E	SPF
G - K	2x6	DRY	1650F 1.5E	SPF
K - L	2x6	DRY	1650F 1.5E	SPF
M - L	2x4	DRY	1650F 1.5E	SPF
V - S	2x6	DRY	1650F 1.5E	SPF

DIMENSIONS, SUPPORTS AND LOADINGS SPECIFIED BY FABRICATOR TO BE VERIFIED BY BUILDING DESIGNER

BEARINGS

JT	FACTORED GROSS REACTION VERT	HORZ	MAXIMUM FACTORED GROSS REACTION DOWN	HORZ	UPLIFT	INPUT BRG	REQRD BRG
V	2816	0	2816	0	0	5-8	1-8
M	2474	0	2474	0	0	1-8	1-8

ALLOW FOR 0.8" OF HORIZONTAL MOVEMENT DUE TO TOTAL LOAD

UNFACTORED REACTIONS

JT	1ST LCASE COMBINED	MAX./MIN. COMPONENT REACTIONS SNOW	LIVE	PERM.LIVE	WIND	DEAD	SOIL
V	1938	1575 / 0	0 / 0	0 / 0	0 / 0	363 / 0	0 / 0
M	1706	1365 / 0	0 / 0	0 / 0	0 / 0	341 / 0	0 / 0

BEARING MATERIAL TO BE SPF NO.2 OR BETTER AT JOINT(S) V

BRACING

TOP CHORD TO BE SHEATHED OR MAX. PURLIN SPACING = 3.74 FT.
MAX. UNBRACED BOTTOM CHORD LENGTH = 6.25 FT OR RIGID CEILING DIRECTLY APPLIED.

ALL PITCH BREAKS AND PERIMETER CORNER JOINTS MUST BE LATERALLY RESTRAINED.

DESIGN CRITERIA

SPECIFIED LOADS:

TOP CH.	LL	=	48.1	PSF
	DL	=	5.0	PSF
BOT CH.	LL	=	0.0	PSF
	DL	=	7.0	PSF
TOTAL LOAD		=	60.0	PSF

SPACING = 24.0 IN. C/C

LOADING IN ALL FLAT SECTIONS BASED ON A SLOPE OF 6.00/12

THIS TRUSS IS DESIGNED FOR RESIDENTIAL OR SMALL BUILDING REQUIREMENTS OF PART 9, NBCC 2015

THIS DESIGN COMPLIES WITH:
- PART 9 OF BCBC 2018 , ABC 2019
- PART 9 OF OBC 2012 (2019 AMENDMENT)
- CSA 086-14
- TPIC 2014

(55 % OF 83.6 P.S.F. G.S.L. PLUS 2.1 P.S.F. RAIN LOAD) EQUALS 48.1 P.S.F. SPECIFIED ROOF LIVE LOAD

ALLOWABLE DEFL.(LL)= L/180 (1.89")
CALCULATED VERT. DEFL.(LL) = L/ 610 (0.56")
ALLOWABLE DEFL.(TL)= L/180 (1.89")
CALCULATED VERT. DEFL.(TL) = L/ 385 (0.88")

CONTINUED ON PAGE 2

JOB NAME	TRUSS NAME	QUANTITY	PLY	JOB DESC. Woodcreek / Adkins	DRWG NO.
211770	ST16	1	2	TRUSS DESC.	

DRY: SEASONED LUMBER.

DESIGN CONSISTS OF **2** TRUSSES BUILT SEPARATELY THEN FASTENED TOGETHER AS FOLLOWS:

CHORDS	#ROWS	SURFACE SPACING (IN)	LOAD(PLF)
TOP CHORDS : (0.122"X3") SPIRAL NAILS			
V- B	1	12	TOP
L- M	1	12	TOP
A- G	2	12	TOP
G- K	2	12	TOP
K- L	2	12	TOP
BOTTOM CHORDS : (0.122"X3") SPIRAL NAILS			
V- S	2	12	TOP
S- Q	2	12	TOP
Q- N	2	12	TOP
N- M	2	12	TOP
WEBS : (0.122"X3") SPIRAL NAILS			
2x3	1	6	

NAILS TO BE DRIVEN FROM ONE SIDE ONLY.

TOP - COMPONENTS ARE LOADED FROM THE TOP AND MUST BE PLACED ON TOP EDGE OF ALL PLIES FOR THE LOAD TO BE TRANSFERRED TO EACH PLY.

PLATES (table is in inches)

JT	TYPE	PLATES	W	LEN	Y	X
B	TMVW-t	MT20	5.0	8.0	2.50	2.25
C	TMWW-t	MT20	5.0	6.0		
D	TMWW-t	MT20	4.0	4.0	2.00	1.75
E	TMW+w	MT20	1.0	4.0		
F	TMWW-t	MT20	5.0	6.0	2.50	2.00
G	TTWW+m	MT20	6.0	12.0	3.50	3.00
H	TMW+w	MT20	1.5	4.0		
I	TMWW-t	MT20	3.0	6.0		
J	TMWW-t	MT20	3.0	6.0		
K	TTWWW-m	MT20	6.0	12.0		
L	TMV+p	MT20	1.5	4.0		
M	BMVW1-t	MT20	5.0	6.0		
N	BBW+m	MT20	6.0	8.0	Edge	
O, P, R, T						
O	BMWW-t	MT20	5.0	6.0		
Q	BBWWW-m	MT20	8.0	10.0	4.25	4.25
S	BBWWW-m	MT20	8.0	10.0	4.50	4.25
U	BMWW-t	MT20	5.0	6.0	2.25	2.00
V	BMV1+l	MT20	1.5	4.0		

Edge - INDICATES REFERENCE CORNER OF PLATE TOUCHES EDGE OF CHORD.

LOADING

TOTAL LOAD CASES: (4)

CHORDS

MEMB. FR-TO	MAX. FORCE (LBS)	FACTORED VERT. LOAD (PLF) FROM	TO	LC1	MAX CSI (LC)	MAX. UNBRAC LENGTH
V- B	-2722 / 0	0.0	0.0	0.09 (1)	7.74	
A- B	0 / 45	-156.6	-156.6	0.09 (1)	10.00	
B- C	-6900 / 0	-156.6	-156.6	0.10 (1)	5.10	
C- D	-11185 / 0	-156.6	-156.6	0.14 (1)	4.18	
D- E	-13437 / 0	-156.6	-156.6	0.28 (1)	3.74	
E- F	-13297 / 0	-156.6	-156.6	0.22 (1)	3.81	
F- G	-9266 / 0	-156.6	-156.6	0.06 (1)	4.59	
G- H	-10667 / 0	-156.6	-156.6	0.21 (1)	4.17	
H- I	-11364 / 0	-156.6	-156.6	0.24 (1)	4.04	
I- J	-10240 / 0	-156.6	-156.6	0.10 (1)	4.36	
J- K	-7652 / 0	-156.6	-156.6	0.08 (1)	4.91	
K- L	0 / 0	-156.6	-156.6	0.03 (1)	10.00	
M- L	-206 / 0	0.0	0.0	0.01 (1)	7.81	
V- U	-15 / 0	-17.5	-17.5	0.05 (1)	6.25	
U- T	0 / 6616	-17.5	-17.5	0.36 (1)	10.00	
T- S	0 / 11017	-17.5	-17.5	0.52 (1)	10.00	
S- R	0 / 9472	-17.5	-17.5	0.36 (1)	10.00	
R- Q	0 / 7169	-17.5	-17.5	0.27 (1)	10.00	
Q- P	0 / 10288	-17.5	-17.5	0.46 (1)	10.00	
P- O	0 / 7628	-17.5	-17.5	0.36 (1)	10.00	
O- N	0 / 4014	-17.5	-17.5	0.19 (1)	10.00	
N- M	0 / 3394	-17.5	-17.5	0.13 (1)	10.00	

WEBS

MEMB. FR-TO	MAX. FORCE (LBS)	MAX CSI (LC)
B- U	0 / 6657	0.75 (1)
U- C	-1914 / 0	0.14 (1)
C- T	0 / 4397	0.49 (1)
T- D	-1484 / 0	0.10 (1)
D- S	0 / 2329	0.26 (1)
S- E	0 / 60	0.01 (4)
S- F	0 / 4505	0.51 (1)
F- R	-2500 / 0	0.18 (1)
R- G	0 / 2986	0.34 (1)
G- Q	0 / 5862	0.66 (1)
Q- H	0 / 861	0.10 (1)
Q- I	0 / 739	0.08 (1)
P- I	-1258 / 0	0.09 (1)
P- J	0 / 2116	0.24 (1)
O- J	-1661 / 0	0.12 (1)
O- K	0 / 2932	0.33 (1)
N- K	-2308 / 0	0.17 (1)
K- M	-4089 / 0	0.39 (1)

CSI: TC=0.28/1.00 (D-E:1) , BC=0.52/1.00 (S-T:1) , WB=0.75/1.00 (B-U:1) , SSI=0.29/1.00 (G-H:1)

DOL LUMBER=1.00 NAIL=1.00 LS BEND=1.10 COMP=1.10 SHEAR=1.10 TENS= 1.10

COMPANION LIVE LOAD FACTOR = 1.00

TRUSS PLATE MANUFACTURER IS NOT RESPONSIBLE FOR QUALITY CONTROL IN THE TRUSS MANUFACTURING PLANT .

NAIL VALUES

PLATE	GRIP(DRY) (PSI) MAX	MIN	SHEAR (PLI) MAX	MIN	SECTION (PLI) MAX	MIN
MT20	650	371	1747	788	1987	1873

PLATE PLACEMENT TOL. = 0.250 inches

PLATE ROTATION TOL. = 5.0 Deg.

JSI GRIP= 0.90 (V) (INPUT = 0.90)
JSI METAL= 0.87 (Q) (INPUT = 1.00)

JOB NAME	TRUSS NAME	QUANTITY	PLY	JOB DESC. Woodcreek / Adkins	DRWG NO.
211770	ST17	1	2	TRUSS DESC.	

KAMLOOPS TRUSS LTD., Kamloops, BC V2H 1G3

Version 8.420 S Mar 22 2021 MiTek Industries, Inc. Thu May 27 07:08:14 2021 Page 1

ID:X2qvwXGfFYBXzZFI6ldjmRzCaiR-xdCwhYPHk8Lc5CAOfDc2Od9Sh64aGxXMBWAb2HzCLUI

Scale = 1:65.4

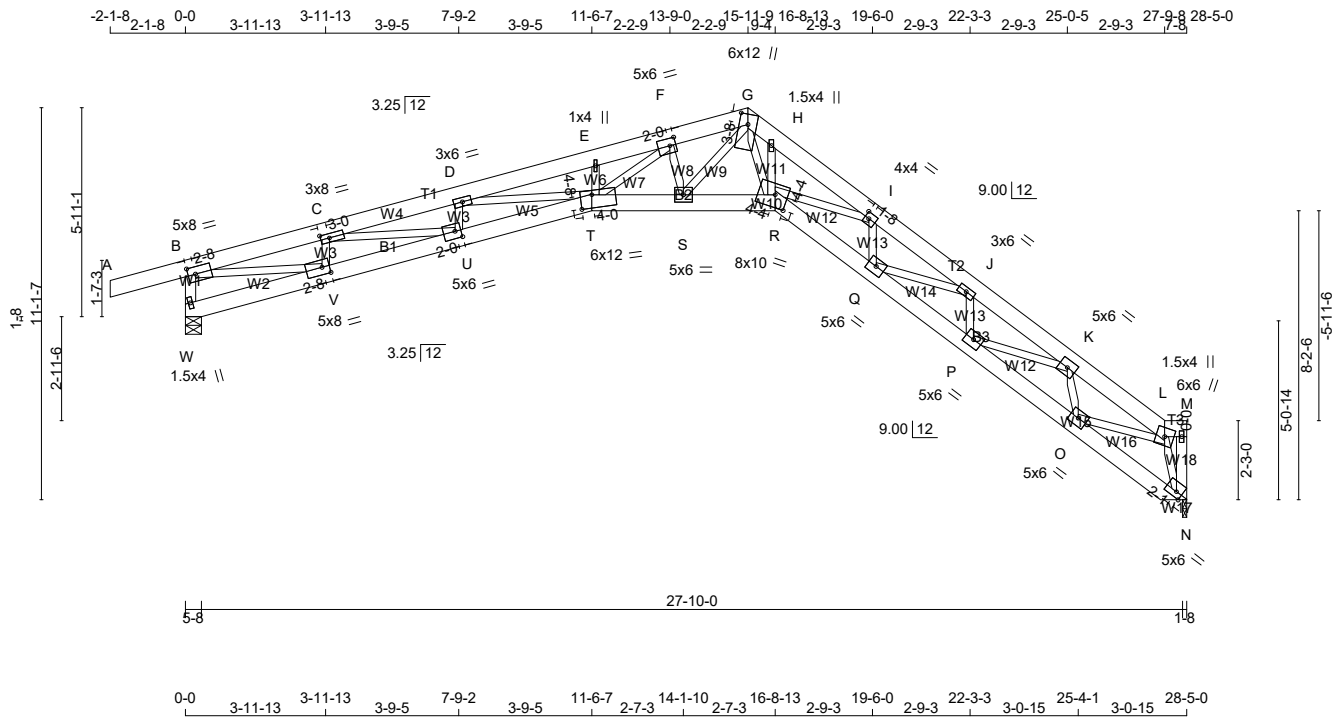

TOTAL WEIGHT = 2 X 155 = 310 lb

[M][F]

LUMBER

N. L. G. A. RULES

CHORDS	SIZE		LUMBER	DESCR.
W - B	2x4	DRY	1650F 1.5E	SPF
A - G	2x6	DRY	1650F 1.5E	SPF
G - L	2x6	DRY	1650F 1.5E	SPF
L - M	2x6	DRY	1650F 1.5E	SPF
N - M	2x4	DRY	1650F 1.5E	SPF
W - T	2x6	DRY	1650F 1.5E	SPF

DIMENSIONS, SUPPORTS AND LOADINGS SPECIFIED BY FABRICATOR TO BE VERIFIED BY BUILDING DESIGNER

BEARINGS

JT	FACTORED GROSS REACTION VERT	HORZ	MAXIMUM FACTORED GROSS REACTION DOWN	HORZ	UPLIFT	INPUT BRG IN-SX	REQRD BRG IN-SX
W	2816	0	2816	0	0	5-8	1-8
N	2474	0	2474	0	0	1-8	1-8

ALLOW FOR 0.9" OF HORIZONTAL MOVEMENT DUE TO TOTAL LOAD

UNFACTORED REACTIONS

JT	1ST LCASE COMBINED	MAX./MIN. COMPONENT REACTIONS SNOW	LIVE	PERM.LIVE	WIND	DEAD	SOIL
W	1938	1575 / 0	0 / 0	0 / 0	0 / 0	363 / 0	0 / 0
N	1706	1365 / 0	0 / 0	0 / 0	0 / 0	341 / 0	0 / 0

BEARING MATERIAL TO BE SPF NO.2 OR BETTER AT JOINT(S) W

BRACING

TOP CHORD TO BE SHEATHED OR MAX. PURLIN SPACING = 3.74 FT.
MAX. UNBRACED BOTTOM CHORD LENGTH = 6.25 FT OR RIGID CEILING DIRECTLY APPLIED.

ALL PITCH BREAKS AND PERIMETER CORNER JOINTS MUST BE LATERALLY RESTRAINED.

DESIGN CRITERIA

SPECIFIED LOADS:

TOP CH.	LL	=	48.1	PSF
	DL	=	5.0	PSF
BOT CH.	LL	=	0.0	PSF
	DL	=	7.0	PSF
TOTAL LOAD		=	60.0	PSF

SPACING = 24.0 IN. C/C

LOADING IN ALL FLAT SECTIONS BASED ON A SLOPE OF 6.00/12

THIS TRUSS IS DESIGNED FOR RESIDENTIAL OR SMALL BUILDING REQUIREMENTS OF PART 9, NBCC 2015

THIS DESIGN COMPLIES WITH:
- PART 9 OF BCBC 2018 , ABC 2019
- PART 9 OF OBC 2012 (2019 AMENDMENT)
- CSA 086-14
- TPIC 2014

(55 % OF 83.6 P.S.F. G.S.L. PLUS 2.1 P.S.F. RAIN LOAD) EQUALS 48.1 P.S.F. SPECIFIED ROOF LIVE LOAD

ALLOWABLE DEFL.(LL)= L/180 (1.89")
CALCULATED VERT. DEFL.(LL) = L/ 619 (0.55")
ALLOWABLE DEFL.(TL)= L/180 (1.89")
CALCULATED VERT. DEFL.(TL) = L/ 391 (0.87")

CONTINUED ON PAGE 2

JOB NAME	TRUSS NAME	QUANTITY	PLY	JOB DESC. Woodcreek / Adkins	DRWG NO.
211770	ST17	1	2	TRUSS DESC.	

KAMLOOPS TRUSS LTD., Kamloops, BC V2H 1G3

ID:X2qvwXGfFYBXzZFI6ldjmRzCaiR-xdCwhYPHk8Lc5CAOfDc2Od9Sh64aGxXMBWAb2HzCLUI

DRY: SEASONED LUMBER.

DESIGN CONSISTS OF **2** TRUSSES BUILT SEPARATELY THEN FASTENED TOGETHER AS FOLLOWS:

CHORDS	#ROWS	SURFACE SPACING (IN)	LOAD(PLF)
TOP CHORDS : (0.122"X3") SPIRAL NAILS			
W- B	1	12	TOP
N- M	1	12	TOP
A- G	2	12	TOP
G- L	2	12	TOP
L- M	2	12	TOP
BOTTOM CHORDS : (0.122"X3") SPIRAL NAILS			
W- T	2	12	TOP
T- R	2	12	TOP
R- N	2	12	TOP
WEBS : (0.122"X3") SPIRAL NAILS			
2x3	1	6	

NAILS TO BE DRIVEN FROM ONE SIDE ONLY.

TOP - COMPONENTS ARE LOADED FROM THE TOP AND MUST BE PLACED ON TOP EDGE OF ALL PLIES FOR THE LOAD TO BE TRANSFERRED TO EACH PLY.

PLATES (table is in inches)

JT	TYPE	PLATES	W	LEN	Y	X
B	TMVW-t	MT20	5.0	8.0	2.50	2.50
C	TMWW-t	MT20	3.0	8.0	1.50	3.00
D	TMWW-t	MT20	3.0	6.0		
E	TMW+w	MT20	1.0	4.0		
F	TMWW-t	MT20	5.0	6.0	2.50	2.00
G	TTWW+m	MT20	6.0	12.0	3.50	3.00
H	TMW+w	MT20	1.5	4.0		
I	TMWW-t	MT20	4.0	4.0	2.00	1.50
J	TMWW-t	MT20	3.0	6.0		
K	TMWW-t	MT20	5.0	6.0		
L	TTWW+m	MT20	6.0	6.0		
M	TMV+p	MT20	1.5	4.0		
N	BMVW1-t	MT20	5.0	6.0	Edge	2.00
O, P, Q, S						
O	BMWW-t	MT20	5.0	6.0		
R	BBWWW-m	MT20	8.0	10.0	4.25	4.25
T	BBWWW-m	MT20	6.0	12.0	4.50	4.00
U	BMWW-t	MT20	5.0	6.0	2.50	2.00
V	BMWW-t	MT20	5.0	8.0	2.50	2.50
W	BMV1+l	MT20	1.5	4.0		

Edge - INDICATES REFERENCE CORNER OF PLATE TOUCHES EDGE OF CHORD.

LOADING

TOTAL LOAD CASES: (4)

CHORDS

MEMB. FR-TO	MAX. FACTORED FORCE (LBS)	FACTORED VERT. LOAD (PLF) FROM	TO	LC1	MAX CSI (LC)	MAX. UNBRAC LENGTH
W- B	-2718 / 0	0.0	0.0	0.09 (1)	7.74	
A- B	0 / 45	-156.6	-156.6	0.09 (1)	10.00	
B- C	-6737 / 0	-156.6	-156.6	0.10 (1)	5.15	
C- D	-11096 / 0	-156.6	-156.6	0.14 (1)	4.19	
D- E	-13434 / 0	-156.6	-156.6	0.28 (1)	3.74	
E- F	-13290 / 0	-156.6	-156.6	0.22 (1)	3.81	
F- G	-9265 / 0	-156.6	-156.6	0.06 (1)	4.59	
G- H	-10615 / 0	-156.6	-156.6	0.22 (1)	4.18	
H- I	-11359 / 0	-156.6	-156.6	0.24 (1)	4.04	
I- J	-10387 / 0	-156.6	-156.6	0.11 (1)	4.33	
J- K	-8198 / 0	-156.6	-156.6	0.09 (1)	4.78	
K- L	-4639 / 0	-156.6	-156.6	0.04 (1)	5.97	
L- M	0 / 0	-156.6	-156.6	0.00 (1)	10.00	
N- M	-49 / 0	0.0	0.0	0.00 (1)	7.81	
W- V	-17 / 0	-17.5	-17.5	0.05 (1)	6.25	
V- U	0 / 6714	-17.5	-17.5	0.36 (1)	10.00	
U- T	0 / 11127	-17.5	-17.5	0.52 (1)	10.00	
T- S	0 / 9471	-17.5	-17.5	0.36 (1)	10.00	
S- R	0 / 7169	-17.5	-17.5	0.27 (1)	10.00	
R- Q	0 / 10444	-17.5	-17.5	0.47 (1)	10.00	
Q- P	0 / 8128	-17.5	-17.5	0.38 (1)	10.00	
P- O	0 / 5100	-17.5	-17.5	0.23 (1)	10.00	
O- N	0 / 1009	-17.5	-17.5	0.06 (1)	10.00	

WEBS

MEMB. FR-TO	MAX. FACTORED FORCE (LBS)	MAX CSI (LC)
B- V	0 / 6502	0.73 (1)
V- C	-1972 / 0	0.14 (1)
C- U	0 / 4223	0.48 (1)
U- D	-1504 / 0	0.11 (1)
D- T	0 / 2217	0.25 (1)
T- E	0 / 72	0.01 (4)
T- F	0 / 4498	0.51 (1)
F- S	-2501 / 0	0.18 (1)
S- G	0 / 2986	0.34 (1)
G- R	0 / 5800	0.65 (1)
R- H	0 / 961	0.11 (1)
R- I	0 / 590	0.07 (1)
Q- I	-1210 / 0	0.09 (1)
Q- J	0 / 1815	0.20 (1)
P- J	-1478 / 0	0.11 (1)
P- K	0 / 2454	0.28 (1)
K- O	-2386 / 0	0.18 (1)
O- L	0 / 2904	0.33 (1)
L- N	-3095 / 0	0.23 (1)

CSI: TC=0.28/1.00 (D-E:1) , BC=0.52/1.00 (T-U:1) , WB=0.73/1.00 (B-V:1) , SSI=0.30/1.00 (G-H:1)

DOL LUMBER=1.00 NAIL=1.00 LS BEND=1.10 COMP=1.10 SHEAR=1.10 TENS= 1.10

COMPANION LIVE LOAD FACTOR = 1.00

TRUSS PLATE MANUFACTURER IS NOT RESPONSIBLE FOR QUALITY CONTROL IN THE TRUSS MANUFACTURING PLANT .

NAIL VALUES

PLATE	GRIP(DRY) (PSI) MAX	MIN	SHEAR (PLI) MAX	MIN	SECTION (PLI) MAX	MIN
MT20	650	371	1747	788	1987	1873

PLATE PLACEMENT TOL. = 0.250 inches

PLATE ROTATION TOL. = 5.0 Deg.

JSI GRIP= 0.90 (U) (INPUT = 0.90)
JSI METAL= 0.92 (T) (INPUT = 1.00)

JOB NAME	TRUSS NAME	QUANTITY	PLY	JOB DESC. Woodcreek / Adkins	DRWG NO.
211770	ST18	1	1	TRUSS DESC.	

KAMLOOPS TRUSS LTD., Kamloops, BC V2H 1G3

ID:X2qvwXGfFYBXzZFl6ldjmRzCaiR-t0Kh6DRYGlbKKVKmnefWU2Fjywo4kplfeqfi6AzCLUj

Scale = 1:82.3

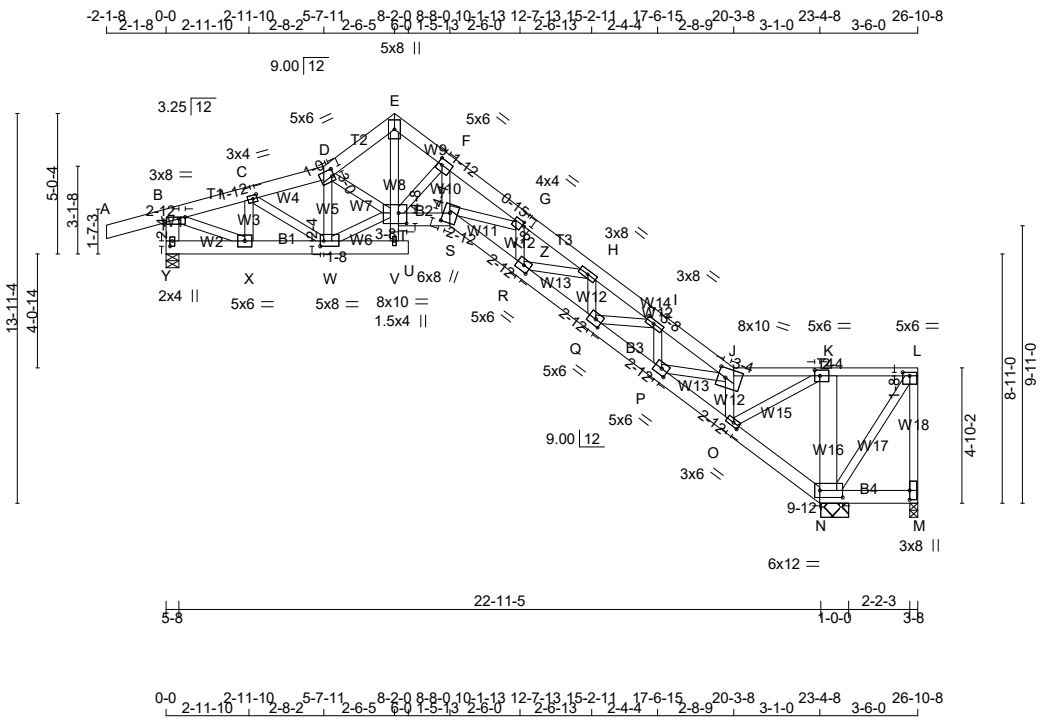

TOTAL WEIGHT = 183 lb

[M]

LUMBER

N. L. G. A. RULES

CHORDS	SIZE		LUMBER	DESCR.
A - D	2x6	DRY	1650F 1.5E	SPF
D - E	2x6	DRY	1650F 1.5E	SPF
E - J	2x6	DRY	1650F 1.5E	SPF
J - L	2x4	DRY	1650F 1.5E	SPF
M - L	2x4	DRY	1650F 1.5E	SPF
Y - B	2x6	DRY	1650F 1.5E	SPF

DIMENSIONS, SUPPORTS AND LOADINGS SPECIFIED BY FABRICATOR TO BE VERIFIED BY BUILDING DESIGNER

BEARINGS

JT	FACTORED GROSS REACTION VERT	HORZ	MAXIMUM FACTORED GROSS REACTION DOWN	HORZ	UPLIFT	INPUT BRG IN-SX	REQRD BRG IN-SX
M	-2714	0	0	0	-2714	3-8	1-8
Y	1948	0	1948	0	0	5-8	2-2
N	5798	0	5798	0	0	1-0-0	6-5

PROVIDE ANCHORAGE AT BEARING JOINT M FOR 2714 LBS FACTORED UPLIFT

NOTE: THIS TRUSS HAS LARGE UPLIFT DUE TO GRAVITY LOADS. ANCHORAGE FOR UPLIFT REACTION SHALL BE PROVIDED BY BUILDING DESIGNER.

ALLOW FOR 0.3" OF HORIZONTAL MOVEMENT DUE TO TOTAL LOAD

UNFACTORED REACTIONS

JT	1ST LCASE COMBINED	MAX./MIN. COMPONENT REACTIONS SNOW	LIVE	PERM.LIVE	WIND	DEAD	SOIL
M	-1873	0 / -1491	0 / 0	0 / 0	0 / 0	0 / -382	0 / 0
Y	1340	1094 / 0	0 / 0	0 / 0	0 / 0	245 / 0	0 / 0
N	4001	3190 / 0	0 / 0	0 / 0	0 / 0	811 / 0	0 / 0

BEARING MATERIAL TO BE SPF NO.2 OR BETTER AT JOINT(S) Y, N

BRACING

TOP CHORD TO BE SHEATHED OR MAX. PURLIN SPACING = 4.59 FT.
MAX. UNBRACED BOTTOM CHORD LENGTH = 5.40 FT OR RIGID CEILING DIRECTLY APPLIED.

MAX. UNBRACED INTERIOR CHORD LENGTH = 7.81 FT

DESIGN CRITERIA

SPECIFIED LOADS:

TOP CH.	LL	=	48.1	PSF
	DL	=	5.0	PSF
BOT CH.	LL	=	0.0	PSF
	DL	=	7.0	PSF
TOTAL LOAD		=	60.0	PSF

SPACING = 24.0 IN. C/C

LOADING IN ALL FLAT SECTIONS BASED ON A SLOPE OF 6.00/12

THIS TRUSS IS DESIGNED FOR RESIDENTIAL OR SMALL BUILDING REQUIREMENTS OF PART 9, NBCC 2015

THIS DESIGN COMPLIES WITH:
- PART 9 OF BCBC 2018 , ABC 2019
- PART 9 OF OBC 2012 (2019 AMENDMENT)
- CSA 086-14
- TPIC 2014

DESIGN ASSUMPTIONS
-OVERHANG NOT TO BE ALTERED OR CUT OFF.

(55 % OF 83.6 P.S.F. G.S.L. PLUS 2.1 P.S.F. RAIN LOAD) EQUALS 48.1 P.S.F. SPECIFIED ROOF LIVE LOAD

ALLOWABLE DEFL.(LL)= L/180 (1.56")

CONTINUED ON PAGE 2

JOB NAME	TRUSS NAME	QUANTITY	PLY	JOB DESC. Woodcreek / Adkins	DRWG NO.
211770	ST18	1	1	TRUSS DESC.	

KAMLOOPS TRUSS LTD., Kamloops, BC V2H 1G3

ID:X2qvwXGfFYBXzZFl6ldjmRzCaiR-t0Kh6DRYGlbKKVKmnefWU2Fjywo4kplfeqfi6AzCLUj

[illegible]
[illegible]
[illegible]
[illegible]

[illegible]
EXCEPT
[illegible]

DRY: SEASONED LUMBER.

PLATES (table is in inches)

JT	TYPE	PLATES	W	LEN	Y	X
B	TMVW-p	MT20	3.0	8.0	Edge	2.75
C	TMWW-t	MT20	3.0	4.0	1.50	1.75
D	TTWW-m	MT20	5.0	6.0	3.00	1.00
E	TTW+p	MT20	5.0	8.0		
F	TMWW-t	MT20	5.0	6.0	2.50	1.75
G						
G	TMWW-t	MT20	4.0	4.0	1.50	1.00
H	TMWW-t	MT20	3.0	8.0		
I	TMWW-t	MT20	3.0	8.0	1.50	3.50
J	TTWW-m	MT20	8.0	10.0	4.00	3.25
K	TMWW-t	MT20	5.0	6.0	2.50	2.25
L	TMVW-t	MT20	5.0	6.0	1.50	3.00
M	BMV1+p	MT20	3.0	8.0	4.00	
N	BBWW1-p	MT20	6.0	12.0	3.00	9.75
O	BMWW-t	MT20	3.0	6.0	1.50	2.75
P, Q, R						
P	BMWW-t	MT20	5.0	6.0	2.50	2.75
S	BBWW+m	MT20	6.0	8.0	4.25	2.75
T	BWMWWW*-l	MT20	8.0	10.0	4.50	3.50
V	BMW+w	MT20	1.5	4.0		
W	BMWWW-t	MT20	5.0	8.0	2.25	1.50
X	BMWW-t	MT20	5.0	6.0		
Y	BMV1+p	MT20	2.0	4.0	2.25	1.00
Z						

Edge - INDICATES REFERENCE CORNER OF PLATE TOUCHES EDGE OF CHORD.

LOADING

TOTAL LOAD CASES: (4)

CHORDS

MEMB. FR-TO	MAX. FACTORED FORCE (LBS)	FACTORED VERT. LOAD (PLF) FROM	TO	LC1 MAX CSI (LC)	MAX. UNBRAC LENGTH
A- B	0 / 45	-156.6	-156.6	0.19 (1)	10.00
B- C	-1935 / 0	-156.6	-156.6	0.20 (1)	6.15
C- D	-2317 / 0	-156.6	-156.6	0.09 (1)	5.90
D- E	-2470 / 0	-156.6	-156.6	0.08 (1)	5.77
E- F	-2389 / 0	-156.6	-156.6	0.09 (1)	5.82
F- G	-4292 / 0	-156.6	-156.6	0.16 (1)	4.59
G- H	-3788 / 0	-156.6	-156.6	0.09 (1)	4.90
H- I	-2430 / 0	-156.6	-156.6	0.05 (1)	5.84
I- J	-562 / 0	-156.6	-156.6	0.06 (1)	6.25
J- K	0 / 1750	-156.6	-156.6	0.54 (1)	10.00
K- L	0 / 2299	-156.6	-156.6	0.61 (1)	10.00
M- L	0 / 2745	0.0	0.0	0.35 (1)	10.00
Y- B	-1903 / 0	0.0	0.0	0.09 (1)	7.81
Y- X	0 / 0	-17.5	-17.5	0.03 (1)	10.00
X- W	0 / 1835	-17.5	-17.5	0.18 (1)	10.00
W- V	0 / 48	-17.5	-17.5	0.02 (1)	10.00
V- U	0 / 0	-17.5	-17.5	0.00 (4)	10.00
T- S	0 / 3245	-17.5	-17.5	0.27 (1)	10.00
S- R	0 / 3615	-17.5	-17.5	0.33 (1)	10.00
R- Q	0 / 2407	-17.5	-17.5	0.23 (1)	10.00
Q- P	0 / 577	-17.5	-17.5	0.07 (1)	10.00
P- O	-2277 / 0	-17.5	-17.5	0.07 (1)	5.96
O- N	-2957 / 0	-17.5	-17.5	0.07 (1)	5.40
N- M	0 / 0	-17.5	-17.5	0.02 (4)	10.00

WEBS

MEMB. FR-TO	MAX. FACTORED FORCE (LBS)	MAX CSI (LC)
X- C	-676 / 0	0.05 (1)
C- W	0 / 495	0.06 (1)
W- D	-1168 / 0	0.10 (1)
S- F	0 / 2315	0.30 (1)
Q- H	-1178 / 0	0.09 (1)
O- J	-674 / 0	0.05 (1)
O- K	0 / 714	0.09 (1)
N- K	-1058 / 0	0.08 (1)
N- L	-3713 / 0	0.88 (1)
B- X	0 / 1964	0.25 (1)
V- T	0 / 42	0.07 (1)
T- E	0 / 2510	0.39 (1)
T- F	-1937 / 0	0.17 (1)
D- T	-232 / 0	0.02 (1)
W- T	0 / 2321	0.30 (1)
R- Z	-694 / 0	0.27 (1)
Z- G	-533 / 0	0.27 (1)
P- I	-1683 / 0	0.13 (1)
P- J	0 / 2268	0.29 (1)
Q- I	0 / 1466	0.19 (1)
R- H	0 / 1105	0.14 (1)
S- Z	0 / 514	0.07 (1)

CALCULATED VERT. DEFL.(LL) = L/ 999 (0.18")
ALLOWABLE DEFL.(TL)= L/180 (1.56")
CALCULATED VERT. DEFL.(TL) = L/ 999 (0.28")

CSI: TC=0.61/1.00 (K-L:1) , BC=0.33/1.00 (R-S:1) , WB=0.88/1.00 (L-N:1) , SSI=0.56/1.00 (G-Z:1)

DOL LUMBER=1.00 NAIL=1.00 LS BEND=1.00 COMP=1.00 SHEAR=1.00 TENS= 1.00

COMPANION LIVE LOAD FACTOR = 1.00

TRUSS PLATE MANUFACTURER IS NOT RESPONSIBLE FOR QUALITY CONTROL IN THE TRUSS MANUFACTURING PLANT .

NAIL VALUES

PLATE	GRIP(DRY) (PSI) MAX	MIN	SHEAR (PLI) MAX	MIN	SECTION (PLI) MAX	MIN
MT20	650	371	1747	788	1987	1873

PLATE PLACEMENT TOL. = 0.250 inches

PLATE ROTATION TOL. = 5.0 Deg.

JSI GRIP= 0.90 (F) (INPUT = 0.90)
JSI METAL= 0.77 (M) (INPUT = 1.00)

JOB NAME	TRUSS NAME	QUANTITY	PLY	JOB DESC. Woodcreek / Adkins	DRWG NO.
211770	ST19	1	1	TRUSS DESC.	

KAMLOOPS TRUSS LTD., Kamloops, BC V2H 1G3

Version 8.420 S Mar 22 2021 MiTek Industries, Inc. Thu May 27 07:08:18 2021 Page 1

ID:X2qvwXGfFYBXzZFI6ldjmRzCaiR-qOSRXvSooMr2ZpU9u3h_ZTK7lkW3CjPy588oB3zCLUh

Scale = 1:83.4

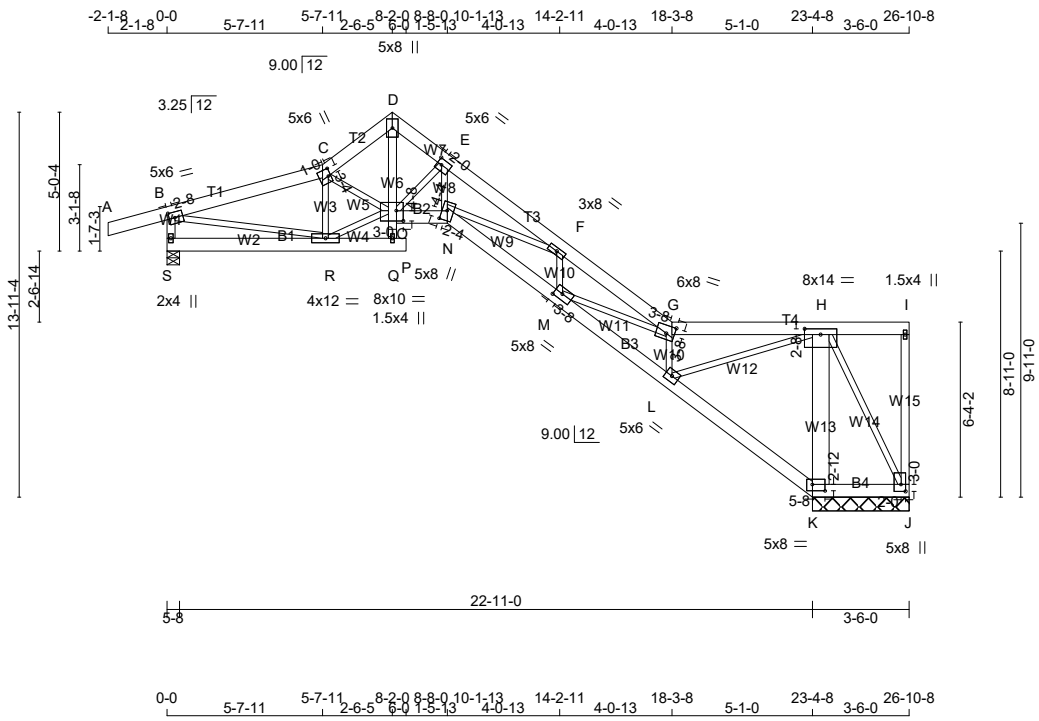

TOTAL WEIGHT = 174 lb

[M]

LUMBER

N. L. G. A. RULES

CHORDS	SIZE		LUMBER	DESCR.
A - C	2x6	DRY	1650F 1.5E	SPF
C - D	2x6	DRY	1650F 1.5E	SPF
D - G	2x6	DRY	1650F 1.5E	SPF
G - I	2x6	DRY	1650F 1.5E	SPF
J - I	2x4	DRY	1650F 1.5E	SPF
S - B	2x4	DRY	1650F 1.5E	SPF

DIMENSIONS, SUPPORTS AND LOADINGS SPECIFIED BY FABRICATOR TO BE VERIFIED BY BUILDING DESIGNER

BEARINGS

JT	FACTORED GROSS REACTION VERT	HORZ	MAXIMUM FACTORED GROSS REACTION DOWN	HORZ	UPLIFT	INPUT BRG	REQRD BRG
J	-3277	0	0	0	-3277	3-6-0	1-1-12
S	1847	0	1847	0	0	5-8	2-8
K	6462	0	6462	0	0	3-6-0	1-1-12

PROVIDE ANCHORAGE AT BEARING JOINT J FOR 3277 LBS FACTORED UPLIFT

NOTE: THIS TRUSS HAS LARGE UPLIFT DUE TO GRAVITY LOADS. ANCHORAGE FOR UPLIFT REACTION SHALL BE PROVIDED BY BUILDING DESIGNER.

ALLOW FOR 0.3" OF HORIZONTAL MOVEMENT DUE TO TOTAL LOAD

UNFACTORED REACTIONS

JT	1ST LCASE COMBINED	MAX./MIN. COMPONENT REACTIONS SNOW	LIVE	PERM.LIVE	WIND	DEAD	SOIL
J	-2262	0 / -1800	0 / 0	0 / 0	0 / 0	0 / -461	0 / 0
S	1270	1038 / 0	0 / 0	0 / 0	0 / 0	232 / 0	0 / 0
K	4459	3555 / 0	0 / 0	0 / 0	0 / 0	904 / 0	0 / 0

BEARING MATERIAL TO BE SPF NO.2 OR BETTER AT JOINT(S) J, S, K

BRACING

TOP CHORD TO BE SHEATHED OR MAX. PURLIN SPACING = 4.77 FT.
MAX. UNBRACED BOTTOM CHORD LENGTH = 5.70 FT OR RIGID CEILING DIRECTLY APPLIED.

MAX. UNBRACED INTERIOR CHORD LENGTH = 10.00 FT

DESIGN CRITERIA

SPECIFIED LOADS:

TOP CH.	LL	=	48.1	PSF
	DL	=	5.0	PSF
BOT CH.	LL	=	0.0	PSF
	DL	=	7.0	PSF
TOTAL LOAD		=	60.0	PSF

SPACING = 24.0 IN. C/C

LOADING IN ALL FLAT SECTIONS BASED ON A SLOPE OF 6.00/12

THIS TRUSS IS DESIGNED FOR RESIDENTIAL OR SMALL BUILDING REQUIREMENTS OF PART 9, NBCC 2015

THIS DESIGN COMPLIES WITH:
- PART 9 OF BCBC 2018 , ABC 2019
- PART 9 OF OBC 2012 (2019 AMENDMENT)
- CSA 086-14
- TPIC 2014

(55 % OF 83.6 P.S.F. G.S.L. PLUS 2.1 P.S.F. RAIN LOAD) EQUALS 48.1 P.S.F. SPECIFIED ROOF LIVE LOAD

ALLOWABLE DEFL.(LL)= L/180 (1.56")
CALCULATED VERT. DEFL.(LL) = L/ 999 (0.22")
ALLOWABLE DEFL.(TL)= L/180 (1.56")
CALCULATED VERT. DEFL.(TL) = L/ 822 (0.34")

CONTINUED ON PAGE 2

JOB NAME	TRUSS NAME	QUANTITY	PLY	JOB DESC. Woodcreek / Adkins	DRWG NO.
211770	ST19	1	1	TRUSS DESC.	

KAMLOOPS TRUSS LTD., Kamloops, BC V2H 1G3

ID:X2qvwXGfFYBXzZFI6ldjmRzCaiR-qOSRXvSooMr2ZpU9u3h_ZTK7lkW3CjPy588oB3zCLUh

DRY: SEASONED LUMBER.

PLATES (table is in inches)

JT	TYPE	PLATES	W	LEN	Y	X
B	TMVW-t	MT20	5.0	6.0	2.50	2.50
C	TTWW+m	MT20	5.0	6.0	3.25	1.00
D	TTW+p	MT20	5.0	8.0		
E	TMWW-t	MT20	5.0	6.0	2.50	2.00
F	TMWW-t	MT20	3.0	8.0		
G	TTWW-m	MT20	6.0	8.0	3.50	3.50
H	TMWWW-t	MT20	8.0	14.0	2.50	7.00
I	TMV+p	MT20	1.5	4.0		
J	BMVW1+p	MT20	5.0	8.0	3.00	2.00
K	BBW1-p	MT20	5.0	8.0	2.75	5.50
L	BMWW-t	MT20	5.0	6.0		
M	BMWW-t	MT20	5.0	8.0	2.50	3.50
N	BBWW+m	MT20	5.0	8.0	4.25	2.25
O	BWMWWW*-l	MT20	8.0	10.0	4.50	3.00
Q	BMW+w	MT20	1.5	4.0		
R	BMWWW-t	MT20	4.0	12.0		
S	BMV1+p	MT20	2.0	4.0		

LOADING

TOTAL LOAD CASES: (4)

CHORDS

MEMB. FR-TO	MAX. FACTORED FORCE (LBS)	FACTORED VERT. LOAD LC1 (PLF) FROM	TO	MAX CSI (LC)	MAX. UNBRAC LENGTH
A- B	0 / 45	-156.6	-156.6	0.18 (1)	10.00
B- C	-2251 / 0	-156.6	-156.6	0.31 (1)	5.69
C- D	-2299 / 0	-156.6	-156.6	0.07 (1)	5.96
D- E	-2268 / 0	-156.6	-156.6	0.06 (1)	6.00
E- F	-3934 / 0	-156.6	-156.6	0.17 (1)	4.77
F- G	-2407 / 0	-156.6	-156.6	0.12 (1)	5.80
G- H	0 / 730	-156.6	-156.6	0.34 (1)	10.00
H- I	0 / 0	-156.6	-156.6	0.28 (1)	10.00
J- I	-60 / 0	0.0	0.0	0.03 (1)	7.81
S- B	-1783 / 0	0.0	0.0	0.12 (1)	7.00
S- R	0 / 0	-17.5	-17.5	0.05 (1)	10.00
R- Q	0 / 62	-17.5	-17.5	0.04 (1)	10.00
Q- P	0 / 0	-17.5	-17.5	0.00 (4)	10.00
O- N	0 / 3022	-17.5	-17.5	0.23 (1)	10.00
N- M	0 / 2451	-17.5	-17.5	0.23 (1)	10.00
M- L	-1031 / 0	-17.5	-17.5	0.05 (1)	6.25
L- K	-2605 / 0	-17.5	-17.5	0.06 (1)	5.70
K- J	-1838 / 0	-17.5	-17.5	0.02 (4)	6.25

WEBS

MEMB. FR-TO	MAX. FACTORED FORCE (LBS)	MAX CSI (LC)
R- C	-1290 / 0	0.22 (1)
N- E	0 / 1881	0.42 (1)
N- F	0 / 1200	0.27 (1)
M- F	-1339 / 0	0.20 (1)
M- G	0 / 2849	0.64 (1)
L- G	-1308 / 0	0.20 (1)
L- H	0 / 1441	0.32 (1)
K- H	-4849 / 0	0.62 (1)
H- J	0 / 3850	0.87 (1)
B- R	0 / 2215	0.50 (1)
Q- O	0 / 59	0.08 (1)
O- D	0 / 2360	0.35 (1)
O- E	-1754 / 0	0.30 (1)
C- O	-258 / 0	0.05 (1)
R- O	0 / 2191	0.49 (1)

CSI: TC=0.34/1.00 (G-H:1) , BC=0.23/1.00 (M-N:1) , WB=0.87/1.00 (H-J:1) , SSI=0.32/1.00 (G-H:1)

DOL LUMBER=1.00 NAIL=1.00 LS BEND=1.10 COMP=1.10 SHEAR=1.10 TENS= 1.10

COMPANION LIVE LOAD FACTOR = 1.00

TRUSS PLATE MANUFACTURER IS NOT RESPONSIBLE FOR QUALITY CONTROL IN THE TRUSS MANUFACTURING PLANT .

NAIL VALUES

PLATE	GRIP(DRY) (PSI) MAX	MIN	SHEAR (PLI) MAX	MIN	SECTION (PLI) MAX	MIN
MT20	650	371	1747	788	1987	1873

PLATE PLACEMENT TOL. = 0.250 inches

PLATE ROTATION TOL. = 5.0 Deg.

JSI GRIP= 0.90 (J) (INPUT = 0.90)
JSI METAL= 0.66 (J) (INPUT = 1.00)

JOB NAME	TRUSS NAME	QUANTITY	PLY	JOB DESC. Woodcreek / Adkins	DRWG NO.
211770	ST20	1	1	TRUSS DESC.	

KAMLOOPS TRUSS LTD., Kamloops, BC V2H 1G3

Version 8.420 S Mar 22 2021 MiTek Industries, Inc. Thu May 27 07:08:20 2021 Page 1

ID:X2qvwXGfFYBXzZFl6ldjmRzCaiR-mnZBxbU2K_5lp7dX0UjSeuPT6X2igbmFZSdvFxzCLUf

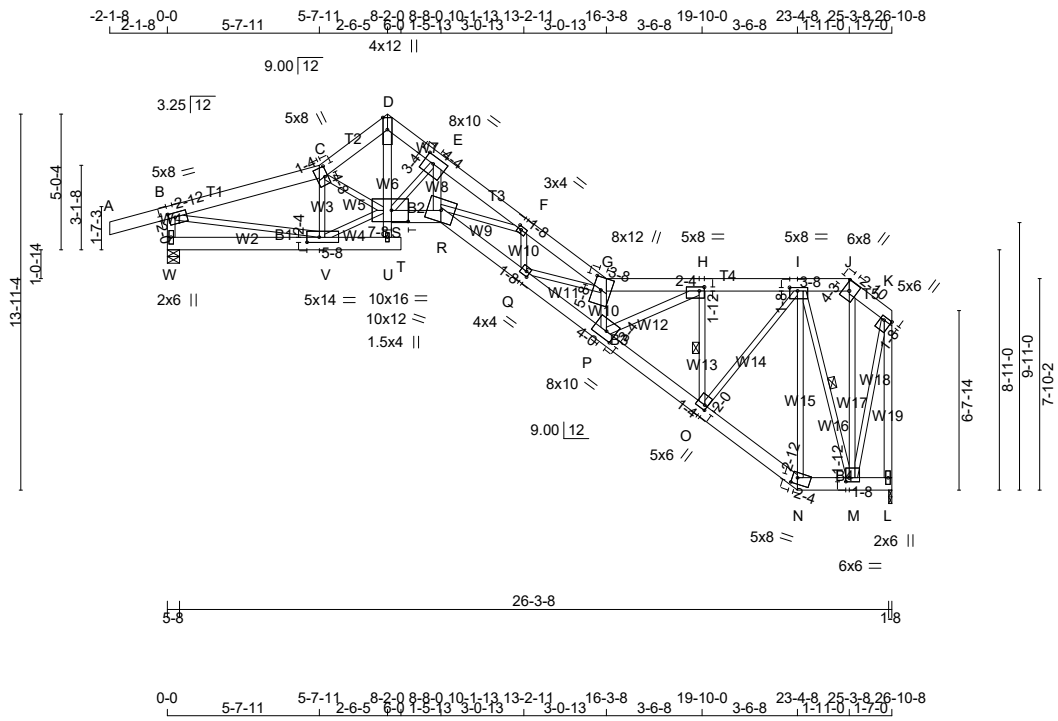

TOTAL WEIGHT = 183 lb

[M][F]

LUMBER

N. L. G. A. RULES

CHORDS	SIZE		LUMBER	DESCR.
A - C	2x6	DRY	1650F 1.5E	SPF
C - D	2x6	DRY	1650F 1.5E	SPF
D - G	2x6	DRY	1650F 1.5E	SPF
G - J	2x6	DRY	1650F 1.5E	SPF
J - K	2x6	DRY	1650F 1.5E	SPF
W - B	2x4	DRY	1650F 1.5E	SPF

DIMENSIONS, SUPPORTS AND LOADINGS SPECIFIED BY FABRICATOR TO BE VERIFIED BY BUILDING DESIGNER

BEARINGS

	FACTORED GROSS REACTION		MAXIMUM FACTORED GROSS REACTION			INPUT BRG	REQRD BRG
JT	VERT	HORZ	DOWN	HORZ	UPLIFT	IN-SX	IN-SX
W	2676	0	2676	0	0	5-8	5-3
L	2330	0	2330	0	0	1-8	4-1

ALLOW FOR 0.7" OF HORIZONTAL MOVEMENT DUE TO TOTAL LOAD

UNFACTORED REACTIONS

	1ST LCASE	MAX./MIN. COMPONENT REACTIONS					
JT	COMBINED	SNOW	LIVE	PERM.LIVE	WIND	DEAD	SOIL
W	1842	1494 / 0	0 / 0	0 / 0	0 / 0	348 / 0	0 / 0
L	1607	1284 / 0	0 / 0	0 / 0	0 / 0	323 / 0	0 / 0

BEARING MATERIAL TO BE SPF NO.2 OR BETTER AT JOINT(S) W

BRACING

TOP CHORD TO BE SHEATHED OR MAX. PURLIN SPACING = 3.18 FT.
MAX. UNBRACED BOTTOM CHORD LENGTH = 10.00 FT OR RIGID CEILING DIRECTLY APPLIED.

MAX. UNBRACED INTERIOR CHORD LENGTH = 10.00 FT

ALL PITCH BREAKS AND PERIMETER CORNER JOINTS MUST BE LATERALLY RESTRAINED.

1 LATERAL BRACE(S) AT 1/ 2 LENGTH OF H-O, I-M.

END VERTICAL(S) MUST BE SHEATHED OR HAVE BRACES AS INDICATED IN
THE MAX. UNBRACED LENGTH COLUMN OF THE TABLE BELOW

DESIGN CRITERIA

SPECIFIED LOADS:

TOP CH.	LL	=	48.1	PSF
	DL	=	5.0	PSF
BOT CH.	LL	=	0.0	PSF
	DL	=	7.0	PSF
TOTAL LOAD		=	60.0	PSF

SPACING = 24.0 IN. C/C

LOADING IN ALL FLAT SECTIONS BASED ON A SLOPE OF 6.00/12

THIS TRUSS IS DESIGNED FOR RESIDENTIAL OR SMALL BUILDING
REQUIREMENTS OF PART 9, NBCC 2015

THIS DESIGN COMPLIES WITH:
- PART 9 OF BCBC 2018 , ABC 2019
- PART 9 OF OBC 2012 (2019 AMENDMENT)
- CSA 086-14
- TPIC 2014

(55 % OF 83.6 P.S.F. G.S.L. PLUS 2.1 P.S.F. RAIN LOAD) EQUALS 48.1
P.S.F. SPECIFIED ROOF LIVE LOAD

ALLOWABLE DEFL.(LL)= L/180 (1.78")
CALCULATED VERT. DEFL.(LL) = L/ 471 (0.68")
ALLOWABLE DEFL.(TL)= L/180 (1.78")
CALCULATED VERT. DEFL.(TL) = L/ 297 (1.08")

CONTINUED ON PAGE 2

JOB NAME	TRUSS NAME	QUANTITY	PLY	JOB DESC. Woodcreek / Adkins	DRWG NO.
211770	ST20	1	1	TRUSS DESC.	

KAMLOOPS TRUSS LTD., Kamloops, BC V2H 1G3

Version 8.420 S Mar 22 2021 MiTek Industries, Inc. Thu May 27 07:08:21 2021 Page 2

ID:X2qvwXGfFYBXzZFI6ldjmRzCaiR-Ez7a9xUg5HDcQHCkZCEhB6yesxOxP2?Oo6NToNzCLUe

2x6 DF No.1&Btr 5E
2x6 DF No.1&Btr 5E
2x6 DF No.1&Btr 5E
2x6 DF No.1&Btr 5E
2x6 DF No.1&Btr 5E

2x4 DF No.2 5E
EXCEPT
2x6 DF No.1&Btr 5E
2x6 DF No.1&Btr 5E
2x6 DF No.1&Btr 5E
2x6 DF No.1&Btr 5E
2x6 DF No.1&Btr 5E

DRY: SEASONED LUMBER.

PLATES (table is in inches)

JT	TYPE	PLATES	W	LEN	Y	X
B	TMVW-t	MT20	5.0	8.0	2.00	2.75
C	TTWW+m	MT20	5.0	8.0	4.50	1.25
D	TTW+p	MT20	4.0	12.0	Edge	
E	TMWW-t	MT20	8.0	10.0	3.25	4.25
F	TMWW-t	MT20	3.0	4.0	1.50	1.50
G	TTWW+m	MT20	8.0	12.0	5.50	3.50
H	TMWW-t	MT20	5.0	8.0	1.75	2.25
I	TMWWW-t	MT20	5.0	8.0	1.50	3.50
J	TTW+h	MT20	6.0	8.0	4.25	2.75
K	TMWW+t	MT20	5.0	6.0	1.50	Edge
L	BMW1+w	MT20	2.0	6.0		
M	BMWWW-t	MT20	6.0	6.0	1.75	1.50
N	BBW-m	MT20	5.0	8.0	2.75	2.25
O	BMWW+t	MT20	5.0	6.0	2.00	1.25
P	BMWW-t	MT20	8.0	10.0	3.25	4.00
Q	BMWW-t	MT20	4.0	4.0	2.00	1.50
R	BBWW-m	MT20	10.0	12.0		
S	BWMWWW*-I	MT20	10.0	16.0	5.00	7.50
U	BMW+w	MT20	1.5	4.0		
V	BMWWW-t	MT20	5.0	14.0	2.25	5.50
W	BMV1+p	MT20	2.0	6.0		

Edge - INDICATES REFERENCE CORNER OF PLATE TOUCHES EDGE OF CHORD.

LOADING

TOTAL LOAD CASES: (4)

CHORDS

MEMB. FR-TO	MAX. FACTORED FORCE (LBS)	FACTORED VERT. LOAD (PLF) FROM	TO	LC1	MAX CSI (LC)	MAX. UNBRAC LENGTH
A- B	0 / 45	-156.6	-156.6	0.18 (1)	10.00	
B- C	-4082 / 0	-156.6	-156.6	0.25 (1)	4.61	
C- D	-4692 / 0	-156.6	-156.6	0.08 (1)	4.53	
D- E	-4554 / 0	-156.6	-156.6	0.16 (1)	4.51	
E- F	-9068 / 0	-156.6	-156.6	0.34 (1)	3.19	
F- G	-9662 / 0	-156.6	-156.6	0.27 (1)	3.18	
G- H	-7645 / 0	-156.6	-156.6	0.18 (1)	3.62	
H- I	-2591 / 0	-156.6	-156.6	0.07 (1)	5.69	
I- J	-365 / 0	-156.6	-156.6	0.03 (1)	6.25	
J- K	-463 / 0	-156.6	-156.6	0.01 (1)	6.25	
W- B	-2596 / 0	0.0	0.0	0.17 (1)	6.06	
W- V	0 / 0	-17.5	-17.5	0.09 (1)	10.00	
V- U	0 / 121	-17.5	-17.5	0.09 (1)	10.00	
U- T	0 / 0	-17.5	-17.5	0.00 (4)	10.00	
S- R	0 / 6810	-17.5	-17.5	0.51 (1)	10.00	
R- Q	0 / 9700	-17.5	-17.5	0.86 (1)	10.00	
Q- P	0 / 9132	-17.5	-17.5	0.83 (1)	10.00	
P- O	0 / 3173	-17.5	-17.5	0.39 (1)	10.00	
O- N	0 / 1150	-17.5	-17.5	0.12 (1)	10.00	
N- M	0 / 916	-17.5	-17.5	0.19 (1)	10.00	
M- L	0 / 0	-17.5	-17.5	0.12 (1)	10.00	

WEBS

MEMB. FR-TO	MAX. FACTORED FORCE (LBS)	MAX CSI (LC)
V- C	-2413 / 0	0.41 (1)
R- E	0 / 5939	0.69 (1)
R- F	-528 / 0	0.12 (1)
Q- F	-256 / 8	0.04 (1)
Q- G	0 / 447	0.10 (1)
P- G	-6287 / 0	0.94 (1)
P- H	0 / 5723	0.67 (1)
O- H	-3222 / 0	0.61 (1)
O- I	0 / 2737	0.62 (1)
N- I	-512 / 0	0.52 (1)
I- M	-2183 / 0	0.82 (1)
M- J	0 / 72	0.02 (1)
B- V	0 / 4017	0.90 (1)
L- K	-2116 / 0	0.75 (1)
U- S	0 / 96	0.16 (1)
S- D	0 / 5068	0.73 (1)
S- E	-4629 / 0	0.80 (1)
C- S	-15 / 43	0.01 (1)
V- S	0 / 3957	0.89 (1)
M- K	0 / 1760	0.40 (1)

CSI: TC=0.34/1.00 (E-F:1) , BC=0.86/1.00 (Q-R:1) , WB=0.94/1.00 (G-P:1) , SSI=0.26/1.00 (B-C:1)

DOL LUMBER=1.00 NAIL=1.00 LS BEND=1.10 COMP=1.10 SHEAR=1.10 TENS= 1.10

COMPANION LIVE LOAD FACTOR = 1.00

TRUSS PLATE MANUFACTURER IS NOT RESPONSIBLE FOR QUALITY CONTROL IN THE TRUSS MANUFACTURING PLANT .

NAIL VALUES

PLATE	GRIP(DRY) (PSI) MAX	MIN	SHEAR (PLI) MAX	MIN	SECTION (PLI) MAX	MIN
MT20	650	371	1747	788	1987	1873

PLATE PLACEMENT TOL. = 0.250 inches

PLATE ROTATION TOL. = 5.0 Deg.

JSI GRIP= 0.90 (P) (INPUT = 0.90)
JSI METAL= 0.92 (D) (INPUT = 1.00)

JOB NAME	TRUSS NAME	QUANTITY	PLY	JOB DESC. Woodcreek / Adkins	DRWG NO.
211770	ST21	1	1	TRUSS DESC.	

KAMLOOPS TRUSS LTD., Kamloops, BC V2H 1G3

Version 8.420 S Mar 22 2021 MiTek Industries, Inc. Thu May 27 07:08:23 2021 Page 1

ID:X2qvwXGfFYBXzZFl6ldjmRzCaiR-AMFKadWxdvUKqaM6hcH9GX1_ql2ltyWhFQsZsGzCLUc

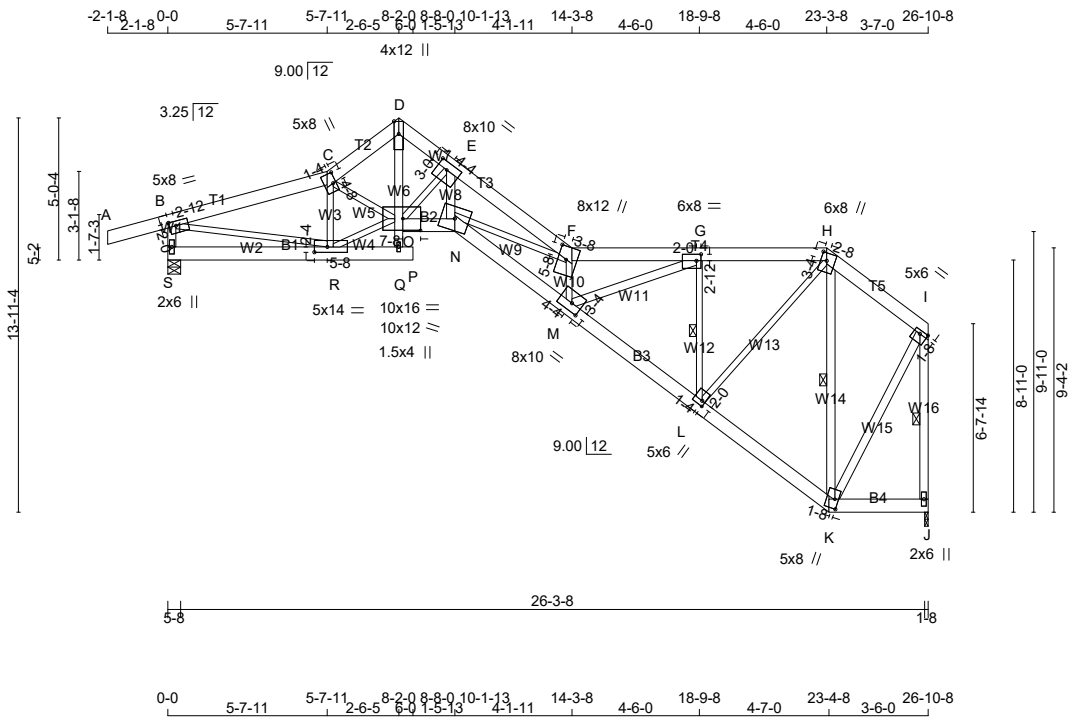

TOTAL WEIGHT = 178 lb

[M][F]

LUMBER

N. L. G. A. RULES

CHORDS	SIZE		LUMBER	DESCR.
A - C	2x6	DRY	1650F 1.5E	SPF
C - D	2x6	DRY	1650F 1.5E	SPF
D - F	2x6	DRY	1650F 1.5E	SPF
F - H	2x6	DRY	1650F 1.5E	SPF
H - I	2x6	DRY	1650F 1.5E	SPF
S - B	2x4	DRY	1650F 1.5E	SPF

DIMENSIONS, SUPPORTS AND LOADINGS SPECIFIED BY FABRICATOR TO BE VERIFIED BY BUILDING DESIGNER

BEARINGS

JT	FACTORED GROSS REACTION VERT	HORZ	MAXIMUM FACTORED GROSS REACTION DOWN	HORZ	UPLIFT	INPUT BRG IN-SX	REQRD BRG IN-SX
S	2689	0	2689	0	0	5-8	5-4
J	2343	0	2343	0	0	1-8	4-2

ALLOW FOR 0.7" OF HORIZONTAL MOVEMENT DUE TO TOTAL LOAD

UNFACTORED REACTIONS

JT	1ST LCASE COMBINED	MAX./MIN. COMPONENT REACTIONS SNOW	LIVE	PERM.LIVE	WIND	DEAD	SOIL
S	1851	1501 / 0	0 / 0	0 / 0	0 / 0	350 / 0	0 / 0
J	1616	1291 / 0	0 / 0	0 / 0	0 / 0	325 / 0	0 / 0

BEARING MATERIAL TO BE SPF NO.2 OR BETTER AT JOINT(S) S

BRACING

TOP CHORD TO BE SHEATHED OR MAX. PURLIN SPACING = 3.16 FT.
MAX. UNBRACED BOTTOM CHORD LENGTH = 10.00 FT OR RIGID CEILING DIRECTLY APPLIED.

MAX. UNBRACED INTERIOR CHORD LENGTH = 10.00 FT

ALL PITCH BREAKS AND PERIMETER CORNER JOINTS MUST BE LATERALLY RESTRAINED.

1 LATERAL BRACE(S) AT 1/ 2 LENGTH OF G-L, H-K, I-J.

END VERTICAL(S) MUST BE SHEATHED OR HAVE BRACES AS INDICATED IN
THE MAX. UNBRACED LENGTH COLUMN OF THE TABLE BELOW

DESIGN CRITERIA

SPECIFIED LOADS:

TOP CH.	LL	=	48.1	PSF
	DL	=	5.0	PSF
BOT CH.	LL	=	0.0	PSF
	DL	=	7.0	PSF
TOTAL LOAD		=	60.0	PSF

SPACING = 24.0 IN. C/C

LOADING IN ALL FLAT SECTIONS BASED ON A SLOPE OF 6.00/12

THIS TRUSS IS DESIGNED FOR RESIDENTIAL OR SMALL BUILDING REQUIREMENTS OF PART 9, NBCC 2015

THIS DESIGN COMPLIES WITH:
- PART 9 OF BCBC 2018 , ABC 2019
- PART 9 OF OBC 2012 (2019 AMENDMENT)
- CSA 086-14
- TPIC 2014

(55 % OF 83.6 P.S.F. G.S.L. PLUS 2.1 P.S.F. RAIN LOAD) EQUALS 48.1 P.S.F. SPECIFIED ROOF LIVE LOAD

ALLOWABLE DEFL.(LL)= L/180 (1.79")
CALCULATED VERT. DEFL.(LL) = L/ 507 (0.64")
ALLOWABLE DEFL.(TL)= L/180 (1.79")
CALCULATED VERT. DEFL.(TL) = L/ 319 (1.01")

CONTINUED ON PAGE 2

JOB NAME	TRUSS NAME	QUANTITY	PLY	JOB DESC. Woodcreek / Adkins	DRWG NO.
211770	ST21	1	1	TRUSS DESC.	

KAMLOOPS TRUSS LTD., Kamloops, BC V2H 1G3

ID:X2qvwXGfFYBXzZFl6ldjmRzCaiR-AMFKadWxdvUKgaM6hcH9GX1_ql2ltyWhFQsZsGzCLUc

[illegible]
[illegible]
[illegible]
[illegible]
[illegible]
[illegible]
[illegible]
[illegible]
EXCEPT
[illegible]
[illegible]
[illegible]
[illegible]
[illegible]
[illegible]

DRY: SEASONED LUMBER.

PLATES (table is in inches)

JT	TYPE	PLATES	W	LEN	Y	X
B	TMVW-t	MT20	5.0	8.0	2.00	2.75
C	TTWW+m	MT20	5.0	8.0	4.50	1.25
D	TTW+p	MT20	4.0	12.0	Edge	
E	TMWW-t	MT20	8.0	10.0	3.00	4.25
F	TTWW+m	MT20	8.0	12.0	5.50	3.50
G	TMWW-t	MT20	6.0	8.0	2.75	2.00
H	TTWW+m	MT20	6.0	8.0	3.25	2.50
I	TMVW-t	MT20	5.0	6.0	1.50	Edge
J	BMV1+p	MT20	2.0	6.0		
K	BBWW+m	MT20	5.0	8.0	4.00	1.50
L	BMWW+t	MT20	5.0	6.0	2.00	1.25
M	BMWW-t	MT20	8.0	10.0	3.25	4.25
N	BBWW-m	MT20	10.0	12.0		
O	BWMWWW*-l	MT20	10.0	16.0	5.00	7.50
Q	BMW+w	MT20	1.5	4.0		
R	BMWWW-t	MT20	5.0	14.0	2.25	5.50
S	BMV1+p	MT20	2.0	6.0		

Edge - INDICATES REFERENCE CORNER OF PLATE TOUCHES EDGE OF CHORD.

LOADING

TOTAL LOAD CASES: (4)

CHORDS

MEMB. FR-TO	MAX. FACTORED FORCE (LBS)	FACTORED VERT. LOAD (PLF) FROM	TO	LC1	MAX CSI (LC)	MAX. UNBRAC LENGTH
A- B	0 / 45	-156.6	-156.6	0.18 (1)	10.00	
B- C	-4110 / 0	-156.6	-156.6	0.25 (1)	4.60	
C- D	-4729 / 0	-156.6	-156.6	0.08 (1)	4.52	
D- E	-4623 / 0	-156.6	-156.6	0.13 (1)	4.51	
E- F	-9161 / 0	-156.6	-156.6	0.38 (1)	3.16	
F- G	-8036 / 0	-156.6	-156.6	0.22 (1)	3.50	
G- H	-2532 / 0	-156.6	-156.6	0.12 (1)	5.69	
H- I	-1018 / 0	-156.6	-156.6	0.09 (1)	6.25	
S- B	-2608 / 0	0.0	0.0	0.17 (1)	6.04	
J- I	-2312 / 0	0.0	0.0	0.31 (1)	5.07	
S- R	0 / 0	-17.5	-17.5	0.09 (1)	10.00	
R- Q	0 / 122	-17.5	-17.5	0.09 (1)	10.00	
Q- P	0 / 0	-17.5	-17.5	0.00 (4)	10.00	
O- N	0 / 6919	-17.5	-17.5	0.52 (1)	10.00	
N- M	0 / 9645	-17.5	-17.5	0.90 (1)	10.00	
M- L	0 / 3099	-17.5	-17.5	0.42 (1)	10.00	
L- K	0 / 1054	-17.5	-17.5	0.12 (1)	10.00	
K- J	0 / 0	-17.5	-17.5	0.02 (4)	10.00	

WEBS

MEMB. FR-TO	MAX. FACTORED FORCE (LBS)	MAX CSI (LC)
R- C	-2430 / 0	0.41 (1)
N- E	0 / 5885	0.68 (1)
N- F	-379 / 0	0.13 (1)
M- F	-6277 / 0	0.94 (1)
M- G	0 / 5971	0.70 (1)
L- G	-3088 / 0	0.67 (1)
L- H	0 / 2647	0.60 (1)
K- H	-1995 / 0	0.53 (1)
B- R	0 / 4044	0.91 (1)
K- I	0 / 1633	0.19 (1)
Q- O	0 / 97	0.16 (1)
O- D	0 / 5167	0.75 (1)
C- O	-14 / 48	0.01 (1)
R- O	0 / 3984	0.90 (1)
O- E	-4751 / 0	0.82 (1)

CSI: TC=0.38/1.00 (E-F:1) , BC=0.90/1.00 (M-N:1) , WB=0.94/1.00 (F-M:1) , SSI=0.26/1.00 (B-C:1)

DOL LUMBER=1.00 NAIL=1.00 LS BEND=1.10 COMP=1.10 SHEAR=1.10 TENS= 1.10

COMPANION LIVE LOAD FACTOR = 1.00

TRUSS PLATE MANUFACTURER IS NOT RESPONSIBLE FOR QUALITY CONTROL IN THE TRUSS MANUFACTURING PLANT .

NAIL VALUES

PLATE	GRIP(DRY) (PSI) MAX	MIN	SHEAR (PLI) MAX	MIN	SECTION (PLI) MAX	MIN
MT20	650	371	1747	788	1987	1873

PLATE PLACEMENT TOL. = 0.250 inches

PLATE ROTATION TOL. = 5.0 Deg.

JSI GRIP= 0.90 (M) (INPUT = 0.90)
JSI METAL= 0.94 (D) (INPUT = 1.00)

JOB NAME	TRUSS NAME	QUANTITY	PLY	JOB DESC. Woodcreek / Adkins	DRWG NO.
211770	ST22	1	1	TRUSS DESC.	

KAMLOOPS TRUSS LTD., Kamloops, BC V2H 1G3

Version 8.420 S Mar 22 2021 MiTek Industries, Inc. Thu May 27 07:08:25 2021 Page 1

ID:X2qvwXGfFYBXzZFl6ldjmRzCaiR-7kN4?IYB9Wk2vuWVo1JdLy6LLYkFLsS_ikLgx9zCLUa

Scale = 1:82.0

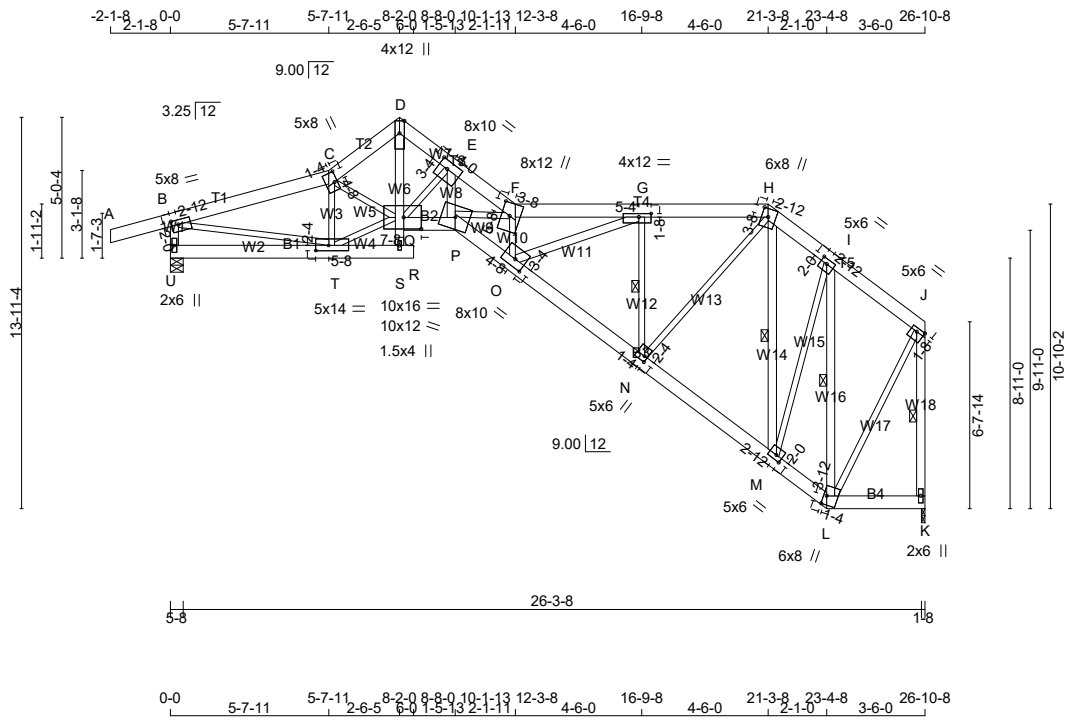

TOTAL WEIGHT = 189 lb

[M][F]

LUMBER

N. L. G. A. RULES

CHORDS	SIZE		LUMBER	DESCR.
A - C	2x6	DRY	1650F 1.5E	SPF
C - D	2x6	DRY	1650F 1.5E	SPF
D - F	2x6	DRY	1650F 1.5E	SPF
F - H	2x6	DRY	1650F 1.5E	SPF
H - J	2x6	DRY	1650F 1.5E	SPF
U - B	2x4	DRY	1650F 1.5E	SPF

DIMENSIONS, SUPPORTS AND LOADINGS SPECIFIED BY FABRICATOR TO BE VERIFIED BY BUILDING DESIGNER

BEARINGS

JT	FACTORED GROSS REACTION VERT	HORZ	MAXIMUM FACTORED GROSS REACTION DOWN	HORZ	UPLIFT	INPUT BRG	REQRD BRG
U	2689	0	2689	0	0	5-8	5-4
K	2343	0	2343	0	0	1-8	4-2

ALLOW FOR 0.7" OF HORIZONTAL MOVEMENT DUE TO TOTAL LOAD

UNFACTORED REACTIONS

JT	1ST LCASE COMBINED	MAX./MIN. COMPONENT REACTIONS SNOW	LIVE	PERM.LIVE	WIND	DEAD	SOIL
U	1851	1501 / 0	0 / 0	0 / 0	0 / 0	350 / 0	0 / 0
K	1616	1291 / 0	0 / 0	0 / 0	0 / 0	325 / 0	0 / 0

BEARING MATERIAL TO BE SPF NO.2 OR BETTER AT JOINT(S) U

BRACING

TOP CHORD TO BE SHEATHED OR MAX. PURLIN SPACING = 3.21 FT.
MAX. UNBRACED BOTTOM CHORD LENGTH = 10.00 FT OR RIGID CEILING DIRECTLY APPLIED.

MAX. UNBRACED INTERIOR CHORD LENGTH = 10.00 FT

ALL PITCH BREAKS AND PERIMETER CORNER JOINTS MUST BE LATERALLY RESTRAINED.

1 LATERAL BRACE(S) AT 1/ 2 LENGTH OF G-N, H-M, I-L, J-K.

END VERTICAL(S) MUST BE SHEATHED OR HAVE BRACES AS INDICATED IN
THE MAX. UNBRACED LENGTH COLUMN OF THE TABLE BELOW

DESIGN CRITERIA

SPECIFIED LOADS:

TOP CH.	LL	=	48.1	PSF
	DL	=	5.0	PSF
BOT CH.	LL	=	0.0	PSF
	DL	=	7.0	PSF
TOTAL LOAD		=	60.0	PSF

SPACING = 24.0 IN. C/C

LOADING IN ALL FLAT SECTIONS BASED ON A SLOPE OF 6.00/12

THIS TRUSS IS DESIGNED FOR RESIDENTIAL OR SMALL BUILDING
REQUIREMENTS OF PART 9, NBCC 2015

THIS DESIGN COMPLIES WITH:
- PART 9 OF BCBC 2018 , ABC 2019
- PART 9 OF OBC 2012 (2019 AMENDMENT)
- CSA 086-14
- TPIC 2014

(55 % OF 83.6 P.S.F. G.S.L. PLUS 2.1 P.S.F. RAIN LOAD) EQUALS 48.1
P.S.F. SPECIFIED ROOF LIVE LOAD

ALLOWABLE DEFL.(LL)= L/180 (1.79")
CALCULATED VERT. DEFL.(LL) = L/ 570 (0.57")
ALLOWABLE DEFL.(TL)= L/180 (1.79")
CALCULATED VERT. DEFL.(TL) = L/ 360 (0.90")

CONTINUED ON PAGE 2

JOB NAME	TRUSS NAME	QUANTITY	PLY	JOB DESC. Woodcreek / Adkins	DRWG NO.
211770	ST22	1	1	TRUSS DESC.	

[illegible]
[illegible]
[illegible]
[illegible]
[illegible]
[illegible]
[illegible]
[illegible]
EXCEPT
[illegible]
[illegible]
[illegible]
[illegible]
[illegible]
[illegible]
[illegible]

DRY: SEASONED LUMBER.

PLATES (table is in inches)

JT	TYPE	PLATES	W	LEN	Y	X
B	TMVW-t	MT20	5.0	8.0	2.00	2.75
C	TTWW+m	MT20	5.0	8.0	4.50	1.25
D	TTW+p	MT20	4.0	12.0	Edge	
E	TMWW-t	MT20	8.0	10.0	3.25	4.00
F	TTWW+m	MT20	8.0	12.0	5.50	3.50
G	TMWW-t	MT20	4.0	12.0	1.50	5.25
H	TTWW+m	MT20	6.0	8.0	3.50	2.75
I	TMWW-t	MT20	5.0	6.0	2.00	2.75
J	TMVW-t	MT20	5.0	6.0	1.50	Edge
K	BMV1+p	MT20	2.0	6.0		
L	BBWW+m	MT20	6.0	8.0	3.75	1.25
M	BMWW-t	MT20	5.0	6.0	2.00	2.75
N	BMWW+t	MT20	5.0	6.0	2.25	1.25
O	BMWW-t	MT20	8.0	10.0	3.25	4.50
P	BBWW-m	MT20	10.0	12.0		
Q	BWMWWW*-l	MT20	10.0	16.0	5.00	7.50
S	BMW+w	MT20	1.5	4.0		
T	BMWWW-t	MT20	5.0	14.0	2.25	5.50
U	BMV1+p	MT20	2.0	6.0		

Edge - INDICATES REFERENCE CORNER OF PLATE TOUCHES EDGE OF CHORD.

LOADING

TOTAL LOAD CASES: (4)

C H O R D S

MEMB. FR-TO	MAX. FACTORED FORCE (LBS)	FACTORED VERT. LOAD (PLF) FROM	TO	LC1 MAX CSI (LC)	MAX. UNBRAC LENGTH
A- B	0 / 45	-156.6	-156.6	0.18 (1)	10.00
B- C	-4110 / 0	-156.6	-156.6	0.25 (1)	4.60
C- D	-4729 / 0	-156.6	-156.6	0.08 (1)	4.52
D- E	-4550 / 0	-156.6	-156.6	0.20 (1)	4.47
E- F	-9103 / 0	-156.6	-156.6	0.31 (1)	3.21
F- G	-7995 / 0	-156.6	-156.6	0.22 (1)	3.51
G- H	-2818 / 0	-156.6	-156.6	0.12 (1)	5.47
H- I	-1498 / 0	-156.6	-156.6	0.07 (1)	6.25
I- J	-1021 / 0	-156.6	-156.6	0.07 (1)	6.25
U- B	-2608 / 0	0.0	0.0	0.17 (1)	6.04
K- J	-2312 / 0	0.0	0.0	0.31 (1)	5.07
U- T	0 / 0	-17.5	-17.5	0.09 (1)	10.00
T- S	0 / 122	-17.5	-17.5	0.09 (1)	10.00
S- R	0 / 0	-17.5	-17.5	0.00 (4)	10.00
Q- P	0 / 6810	-17.5	-17.5	0.51 (1)	10.00
P- O	0 / 9641	-17.5	-17.5	0.90 (1)	10.00
O- N	0 / 3455	-17.5	-17.5	0.44 (1)	10.00
N- M	0 / 1498	-17.5	-17.5	0.17 (1)	10.00
M- L	0 / 990	-17.5	-17.5	0.11 (1)	10.00
L- K	0 / 0	-17.5	-17.5	0.02 (4)	10.00

W E B S

MEMB. FR-TO	MAX. FACTORED FORCE (LBS)	MAX CSI (LC)
T- C	-2431 / 0	0.41 (1)
P- E	0 / 6073	0.71 (1)
P- F	-448 / 0	0.07 (1)
O- F	-5972 / 0	0.89 (1)
O- G	0 / 5617	0.65 (1)
N- G	-2947 / 0	0.64 (1)
N- H	0 / 2554	0.57 (1)
M- H	-1475 / 0	0.40 (1)
M- I	0 / 1226	0.28 (1)
L- I	-1997 / 0	0.53 (1)
B- T	0 / 4044	0.91 (1)
L- J	0 / 1696	0.38 (1)
S- Q	0 / 97	0.16 (1)
Q- D	0 / 5043	0.73 (1)
Q- E	-4583 / 0	0.79 (1)
C- Q	-14 / 48	0.01 (1)
T- Q	0 / 3985	0.90 (1)

CSI: TC=0.31/1.00 (E-F:1) , BC=0.90/1.00 (O-P:1) , WB=0.91/1.00 (B-T:1) , SSI=0.26/1.00 (B-C:1)

DOL LUMBER=1.00 NAIL=1.00 LS BEND=1.10 COMP=1.10 SHEAR=1.10 TENS= 1.10

COMPANION LIVE LOAD FACTOR = 1.00

TRUSS PLATE MANUFACTURER IS NOT RESPONSIBLE FOR QUALITY CONTROL IN THE TRUSS MANUFACTURING PLANT .

NAIL VALUES

PLATE	GRIP(DRY) (PSI) MAX	MIN	SHEAR (PLI) MAX	MIN	SECTION (PLI) MAX	MIN
MT20	650	371	1747	788	1987	1873

PLATE PLACEMENT TOL. = 0.250 inches

PLATE ROTATION TOL. = 5.0 Deg.

JSI GRIP= 0.90 (N) (INPUT = 0.90)
JSI METAL= 0.92 (D) (INPUT = 1.00)

JOB NAME	TRUSS NAME	QUANTITY	PLY	JOB DESC. Woodcreek / Adkins	DRWG NO.
211770	ST23	1	1	TRUSS DESC.	

KAMLOOPS TRUSS LTD., Kamloops, BC V2H 1G3

ID:X2qvwXGfFYBXzZFl6ldjmRzCaiR-XJ2DdKa3RR6dmME4UAtKzaksdmrwYDeQPiZKYTzCLUX

Scale = 1:82.0

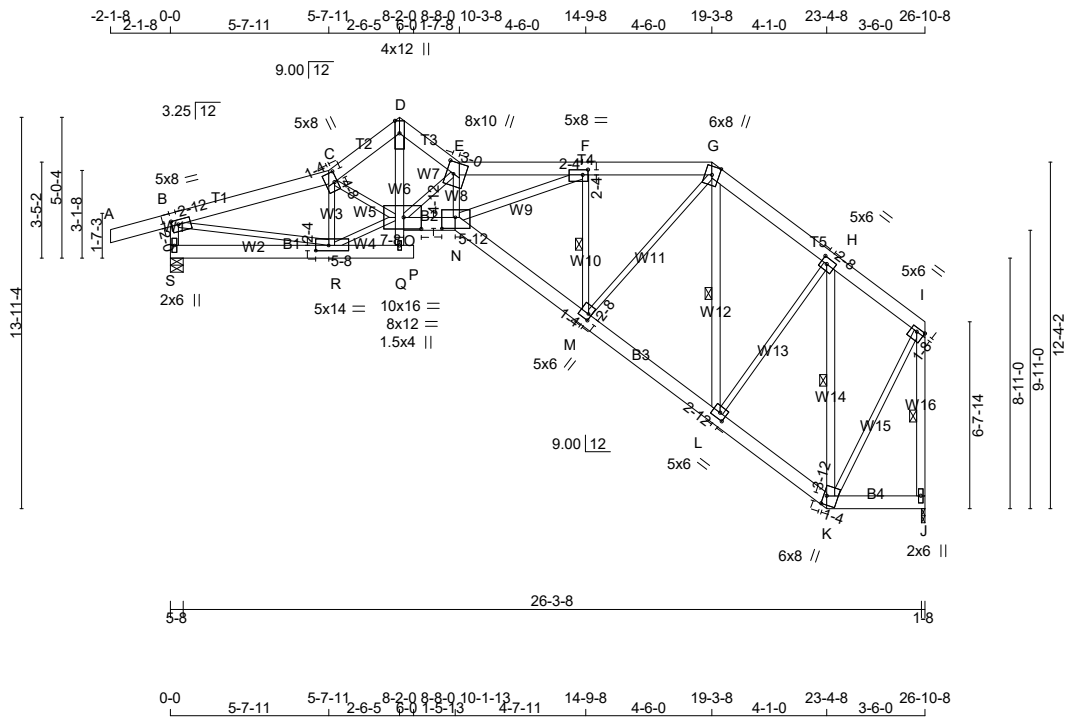

TOTAL WEIGHT = 185 lb

[M][F]

LUMBER

N. L. G. A. RULES

CHORDS	SIZE		LUMBER	DESCR.
A - C	2x6	DRY	1650F 1.5E	SPF
C - D	2x6	DRY	1650F 1.5E	SPF
D - E	2x6	DRY	1650F 1.5E	SPF
E - G	2x6	DRY	1650F 1.5E	SPF
G - I	2x6	DRY	1650F 1.5E	SPF
S - B	2x4	DRY	1650F 1.5E	SPF

DIMENSIONS, SUPPORTS AND LOADINGS SPECIFIED BY FABRICATOR TO BE VERIFIED BY BUILDING DESIGNER

BEARINGS

	FACTORED GROSS REACTION		MAXIMUM FACTORED GROSS REACTION			INPUT BRG	REQRD BRG
JT	VERT	HORZ	DOWN	HORZ	UPLIFT	IN-SX	IN-SX
S	2689	0	2689	0	0	5-8	5-4
J	2343	0	2343	0	0	1-8	4-2

ALLOW FOR 0.5" OF HORIZONTAL MOVEMENT DUE TO TOTAL LOAD

UNFACTORED REACTIONS

	1ST LCASE	MAX./MIN. COMPONENT REACTIONS					
JT	COMBINED	SNOW	LIVE	PERM.LIVE	WIND	DEAD	SOIL
S	1851	1501 / 0	0 / 0	0 / 0	0 / 0	350 / 0	0 / 0
J	1616	1291 / 0	0 / 0	0 / 0	0 / 0	325 / 0	0 / 0

BEARING MATERIAL TO BE SPF NO.2 OR BETTER AT JOINT(S) S

BRACING

TOP CHORD TO BE SHEATHED OR MAX. PURLIN SPACING = 3.55 FT.
MAX. UNBRACED BOTTOM CHORD LENGTH = 10.00 FT OR RIGID CEILING DIRECTLY APPLIED.

MAX. UNBRACED INTERIOR CHORD LENGTH = 10.00 FT

ALL PITCH BREAKS AND PERIMETER CORNER JOINTS MUST BE LATERALLY RESTRAINED.

1 LATERAL BRACE(S) AT 1/ 2 LENGTH OF F-M, G-L, H-K, I-J.

END VERTICAL(S) MUST BE SHEATHED OR HAVE BRACES AS INDICATED IN
THE MAX. UNBRACED LENGTH COLUMN OF THE TABLE BELOW

DESIGN CRITERIA

SPECIFIED LOADS:

TOP CH.	LL	=	48.1	PSF
	DL	=	5.0	PSF
BOT CH.	LL	=	0.0	PSF
	DL	=	7.0	PSF
TOTAL LOAD		=	60.0	PSF

SPACING = 24.0 IN. C/C

LOADING IN ALL FLAT SECTIONS BASED ON A SLOPE OF 6.00/12

THIS TRUSS IS DESIGNED FOR RESIDENTIAL OR SMALL BUILDING
REQUIREMENTS OF PART 9, NBCC 2015

THIS DESIGN COMPLIES WITH:
- PART 9 OF BCBC 2018 , ABC 2019
- PART 9 OF OBC 2012 (2019 AMENDMENT)
- CSA 086-14
- TPIC 2014

(55 % OF 83.6 P.S.F. G.S.L. PLUS 2.1 P.S.F. RAIN LOAD) EQUALS 48.1
P.S.F. SPECIFIED ROOF LIVE LOAD

ALLOWABLE DEFL.(LL)= L/180 (1.79")
CALCULATED VERT. DEFL.(LL) = L/ 752 (0.43")
ALLOWABLE DEFL.(TL)= L/180 (1.79")
CALCULATED VERT. DEFL.(TL) = L/ 474 (0.68")

CONTINUED ON PAGE 2

JOB NAME	TRUSS NAME	QUANTITY	PLY	JOB DESC. Woodcreek / Adkins	DRWG NO.
211770	ST23	1	1	TRUSS DESC.	

KAMLOOPS TRUSS LTD., Kamloops, BC V2H 1G3

ID:X2qvwXGfFYBXzZFI6ldjmRzCaiR-XJ2DdKa3RR6dmME4UAtKzaksdmrwYDeQPiZKYTzCLUX

[illegible]
[illegible]
[illegible]
[illegible]
[illegible]
[illegible]
[illegible]
[illegible]
EXCEPT
[illegible]
[illegible]
[illegible]
[illegible]
[illegible]

DRY: SEASONED LUMBER.

PLATES (table is in inches)

JT	TYPE	PLATES	W	LEN	Y	X
B	TMVW-t	MT20	5.0	8.0	2.00	2.75
C	TTWW+m	MT20	5.0	8.0	4.50	1.25
D	TTW+p	MT20	4.0	12.0	Edge	
E	TTWW+m	MT20	8.0	10.0	5.00	3.00
F	TMWW-t	MT20	5.0	8.0	2.25	2.25
G	TTWW+m	MT20	6.0	8.0	Edge	
H	TMWW-t	MT20	5.0	6.0	2.50	2.50
I	TMVW-t	MT20	5.0	6.0	1.50	Edge
J	BMV1+p	MT20	2.0	6.0		
K	BBWW+m	MT20	6.0	8.0	3.75	1.25
L	BMWW-t	MT20	5.0	6.0	2.50	2.75
M	BMWW+t	MT20	5.0	6.0	2.50	1.25
N	BBWW-p	MT20	8.0	12.0	4.75	5.75
O	BWMWWW*-l	MT20	10.0	16.0	5.00	7.50
Q	BMW+w	MT20	1.5	4.0		
R	BMWWW-t	MT20	5.0	14.0	2.25	5.50
S	BMV1+p	MT20	2.0	6.0		

Edge - INDICATES REFERENCE CORNER OF PLATE TOUCHES EDGE OF CHORD.

LOADING

TOTAL LOAD CASES: (4)

C H O R D S

MEMB. FR-TO	MAX. FACTORED FORCE (LBS)	FACTORED VERT. LOAD (PLF) FROM	TO	LC1	MAX CSI (LC)	MAX. UNBRAC LENGTH
A- B	0 / 45	-156.6	-156.6	0.18 (1)	10.00	
B- C	-4109 / 0	-156.6	-156.6	0.25 (1)	4.60	
C- D	-4723 / 0	-156.6	-156.6	0.08 (1)	4.52	
D- E	-4676 / 0	-156.6	-156.6	0.07 (1)	4.55	
E- F	-7784 / 0	-156.6	-156.6	0.22 (1)	3.55	
F- G	-2942 / 0	-156.6	-156.6	0.13 (1)	5.38	
G- H	-1843 / 0	-156.6	-156.6	0.11 (1)	6.25	
H- I	-1019 / 0	-156.6	-156.6	0.09 (1)	6.25	
S- B	-2608 / 0	0.0	0.0	0.17 (1)	6.04	
J- I	-2312 / 0	0.0	0.0	0.31 (1)	5.07	
S- R	0 / 0	-17.5	-17.5	0.09 (1)	10.00	
R- Q	0 / 123	-17.5	-17.5	0.09 (1)	10.00	
Q- P	0 / 0	-17.5	-17.5	0.00 (4)	10.00	
O- N	0 / 7810	-17.5	-17.5	0.58 (1)	10.00	
N- M	0 / 3668	-17.5	-17.5	0.29 (1)	10.00	
M- L	0 / 1825	-17.5	-17.5	0.15 (1)	10.00	
L- K	0 / 1027	-17.5	-17.5	0.09 (1)	10.00	
K- J	0 / 0	-17.5	-17.5	0.02 (4)	10.00	

W E B S

MEMB. FR-TO	MAX. FACTORED FORCE (LBS)	MAX CSI (LC)
R- C	-2424 / 0	0.41 (1)
N- E	0 / 334	0.08 (1)
N- F	0 / 5249	0.61 (1)
M- F	-2781 / 0	0.61 (1)
M- G	0 / 2301	0.52 (1)
L- G	-1257 / 0	0.34 (1)
L- H	0 / 1070	0.24 (1)
K- H	-2044 / 0	0.54 (1)
B- R	0 / 4044	0.91 (1)
K- I	0 / 1710	0.38 (1)
Q- O	0 / 98	0.16 (1)
O- D	0 / 5219	0.75 (1)
O- E	-5424 / 0	0.95 (1)
C- O	-15 / 42	0.01 (1)
R- O	0 / 3981	0.90 (1)

CSI: TC=0.31/1.00 (I-J:1) , BC=0.58/1.00 (N-O:1) , WB=0.95/1.00 (E-O:1) , SSI=0.26/1.00 (B-C:1)

DOL LUMBER=1.00 NAIL=1.00 LS BEND=1.10 COMP=1.10 SHEAR=1.10 TENS= 1.10

COMPANION LIVE LOAD FACTOR = 1.00

TRUSS PLATE MANUFACTURER IS NOT RESPONSIBLE FOR QUALITY CONTROL IN THE TRUSS MANUFACTURING PLANT .

NAIL VALUES

PLATE	GRIP(DRY) (PSI) MAX	MIN	SHEAR (PLI) MAX	MIN	SECTION (PLI) MAX	MIN
MT20	650	371	1747	788	1987	1873

PLATE PLACEMENT TOL. = 0.250 inches

PLATE ROTATION TOL. = 5.0 Deg.

JSI GRIP= 0.89 (C) (INPUT = 0.90)
JSI METAL= 0.97 (N) (INPUT = 1.00)

JOB NAME	TRUSS NAME	QUANTITY	PLY	JOB DESC. Woodcreek / Adkins	DRWG NO.
211770	ST24	1	1	TRUSS DESC.	

KAMLOOPS TRUSS LTD., Kamloops, BC V2H 1G3

Version 8.420 S Mar 22 2021 MiTek Industries, Inc. Thu May 27 07:08:30 2021 Page 1

ID:X2qvwXGfFYBXzZFl6ldjmRzCaiR-TiAz20bKz2?fOSbavo2?qB9ZSW09qjs02RcMzCLUV

Scale = 1:79.3

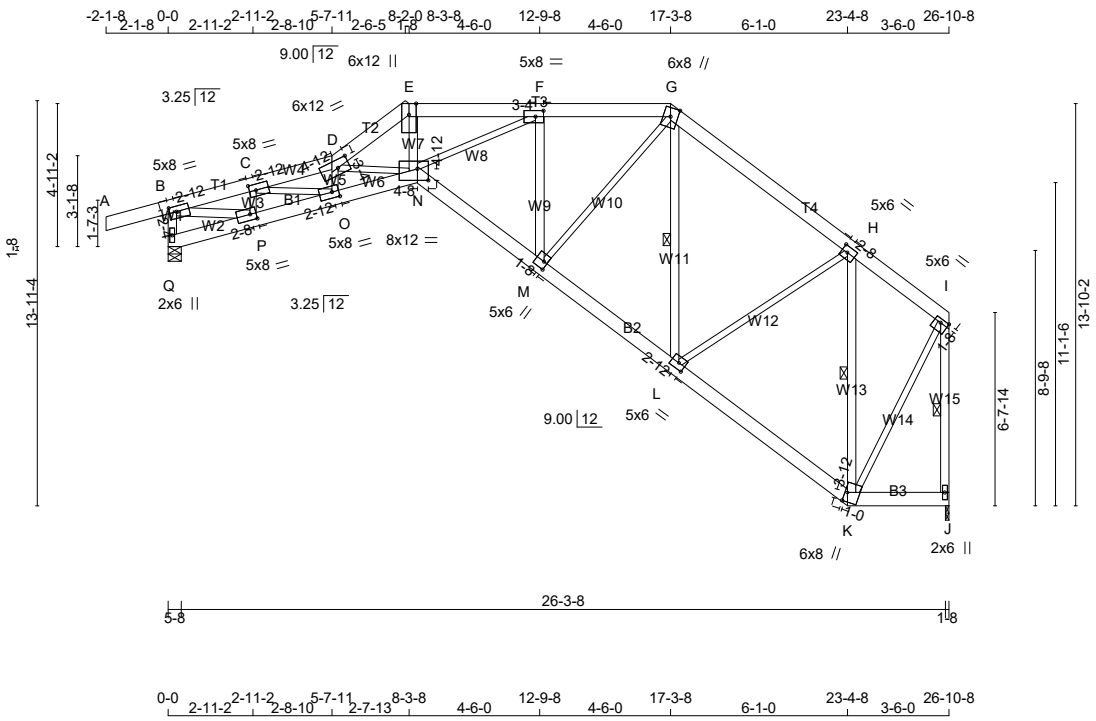

TOTAL WEIGHT = 178 lb

LUMBER

N. L. G. A. RULES

CHORDS	SIZE		LUMBER	DESCR.
Q - B	2x4	DRY	1650F 1.5E	SPF
A - D	2x6	DRY	1650F 1.5E	SPF
D - E	2x6	DRY	1650F 1.5E	SPF
E - G	2x6	DRY	1650F 1.5E	SPF
G - I	2x6	DRY	1650F 1.5E	SPF
J - I	2x4	DRY	1650F 1.5E	SPF

DIMENSIONS, SUPPORTS AND LOADINGS SPECIFIED BY FABRICATOR TO BE VERIFIED BY BUILDING DESIGNER

BEARINGS

JT	FACTORED GROSS REACTION VERT	HORZ	MAXIMUM FACTORED GROSS REACTION DOWN	HORZ	UPLIFT	INPUT BRG IN-SX	REQRD BRG IN-SX
Q	2696	0	2696	0	0	5-8	2-15
J	2326	0	2326	0	0	1-8	4-1

ALLOW FOR 0.5" OF HORIZONTAL MOVEMENT DUE TO TOTAL LOAD

UNFACTORED REACTIONS

JT	1ST LCASE COMBINED	MAX./MIN. COMPONENT REACTIONS SNOW	LIVE	PERM.LIVE	WIND	DEAD	SOIL
Q	1855	1510 / 0	0 / 0	0 / 0	0 / 0	345 / 0	0 / 0
J	1604	1283 / 0	0 / 0	0 / 0	0 / 0	322 / 0	0 / 0

BEARING MATERIAL TO BE SPF NO.2 OR BETTER AT JOINT(S) Q

BRACING

TOP CHORD TO BE SHEATHED OR MAX. PURLIN SPACING = 3.49 FT.
MAX. UNBRACED BOTTOM CHORD LENGTH = 10.00 FT OR RIGID CEILING DIRECTLY APPLIED.

ALL PITCH BREAKS AND PERIMETER CORNER JOINTS MUST BE LATERALLY RESTRAINED.

1 LATERAL BRACE(S) AT 1/ 2 LENGTH OF G-L, H-K, I-J.

END VERTICAL(S) MUST BE SHEATHED OR HAVE BRACES AS INDICATED IN
THE MAX. UNBRACED LENGTH COLUMN OF THE TABLE BELOW

[M][F]

DESIGN CRITERIA

SPECIFIED LOADS:

TOP CH.	LL	=	48.1	PSF
	DL	=	5.0	PSF
BOT CH.	LL	=	0.0	PSF
	DL	=	7.0	PSF
TOTAL LOAD		=	60.0	PSF

SPACING = 24.0 IN. C/C

LOADING IN FLAT SECTION BASED ON A SLOPE OF 6.00/12

THIS TRUSS IS DESIGNED FOR RESIDENTIAL OR SMALL BUILDING
REQUIREMENTS OF PART 9, NBCC 2015

THIS DESIGN COMPLIES WITH:
- PART 9 OF BCBC 2018 , ABC 2019
- PART 9 OF OBC 2012 (2019 AMENDMENT)
- CSA 086-14
- TPIC 2014

DESIGN ASSUMPTIONS
-OVERHANG NOT TO BE ALTERED OR CUT OFF.

(55 % OF 83.6 P.S.F. G.S.L. PLUS 2.1 P.S.F. RAIN LOAD) EQUALS 48.1
P.S.F. SPECIFIED ROOF LIVE LOAD

ALLOWABLE DEFL.(LL)= L/180 (1.79")

CONTINUED ON PAGE 2

JOB NAME	TRUSS NAME	QUANTITY	PLY	JOB DESC. Woodcreek / Adkins	DRWG NO.
211770	ST24	1	1	TRUSS DESC.	

[illegible]
[illegible]
[illegible]
[illegible]

[illegible]
EXCEPT
[illegible]
[illegible]
[illegible]
[illegible]
[illegible]
[illegible]

DRY: SEASONED LUMBER.

PLATES (table is in inches)

JT	TYPE	PLATES	W	LEN	Y	X
B	TMVW-t	MT20	5.0	8.0	2.25	2.75
C	TMWW-t	MT20	5.0	8.0	2.50	2.75
D	TTWW-m	MT20	6.0	12.0	3.25	4.75
E	TTW+p	MT20	6.0	12.0	Edge	
F	TMWW-t	MT20	5.0	8.0	2.50	3.25
G	TTWW+m	MT20	6.0	8.0	Edge	
H	TMWW-t	MT20	5.0	6.0	2.50	2.50
I	TMVW-t	MT20	5.0	6.0	1.50	Edge
J	BMV1+p	MT20	2.0	6.0		
K	BBWW+m	MT20	6.0	8.0	3.75	1.00
L	BMWW-t	MT20	5.0	6.0	2.50	2.75
M	BMWW+t	MT20	5.0	6.0	3.00	1.50
N	BBWWW-p	MT20	8.0	12.0	4.75	4.50
O	BMWW-t	MT20	5.0	8.0	2.50	2.75
P	BMWW-t	MT20	5.0	8.0	2.50	2.50
Q	BMV1+p	MT20	2.0	6.0		

Edge - INDICATES REFERENCE CORNER OF PLATE TOUCHES EDGE OF CHORD.

LOADING
TOTAL LOAD CASES: (4)

CHORDS

MEMB. FR-TO	FORCE (LBS) MAX.	FORCE (LBS) FACTORED	VERT. LOAD (PLF) FROM	VERT. LOAD (PLF) TO	LC1	MAX CSI (LC)	MAX. UNBRAC LENGTH
Q- B	-2670 / 0		0.0	0.0		0.17 (1)	5.98
A- B	0 / 45		-156.6	-156.6		0.18 (1)	10.00
B- C	-4726 / 0		-156.6	-156.6		0.17 (1)	4.43
C- D	-8159 / 0		-156.6	-156.6		0.20 (1)	3.49
D- E	-6578 / 0		-156.6	-156.6		0.12 (1)	3.91
E- F	-5780 / 0		-156.6	-156.6		0.17 (1)	4.09
F- G	-2922 / 0		-156.6	-156.6		0.12 (1)	5.40
G- H	-2086 / 0		-156.6	-156.6		0.25 (1)	5.95
H- I	-1003 / 0		-156.6	-156.6		0.18 (1)	6.25
J- I	-2295 / 0		0.0	0.0		0.31 (1)	5.08
Q- P	0 / 1		-17.5	-17.5		0.01 (4)	10.00
P- O	0 / 4622		-17.5	-17.5		0.64 (1)	10.00
O- N	0 / 8088		-17.5	-17.5		0.89 (1)	10.00
N- M	0 / 3649		-17.5	-17.5		0.29 (1)	10.00
M- L	0 / 2043		-17.5	-17.5		0.18 (1)	10.00
L- K	0 / 1059		-17.5	-17.5		0.11 (1)	10.00
K- J	0 / 0		-17.5	-17.5		0.02 (4)	10.00

WEBS

MEMB. FR-TO	FORCE (LBS) MAX.	FORCE (LBS) FACTORED	MAX CSI (LC)
B- P	0 / 4573		0.53 (1)
P- C	-1653 / 0		0.23 (1)
C- O	0 / 3436		0.77 (1)
O- D	-1897 / 0		0.27 (1)
M- F	-2417 / 0		0.59 (1)
M- G	0 / 1991		0.45 (1)
L- G	-1014 / 0		0.27 (1)
L- H	0 / 950		0.21 (1)
K- H	-2091 / 0		0.55 (1)
K- I	0 / 1762		0.40 (1)
N- E	0 / 3442		0.40 (1)
D- N	-2415 / 0		0.43 (1)
N- F	0 / 3238		0.73 (1)

CALCULATED VERT. DEFL.(LL) = L/ 942 (0.34")
ALLOWABLE DEFL.(TL)= L/180 (1.79")
CALCULATED VERT. DEFL.(TL) = L/ 595 (0.54")

CSI: TC=0.31/1.00 (I-J:1) , BC=0.89/1.00 (N-O:1) , WB=0.77/1.00 (C-O:1) , SSI=0.27/1.00 (G-H:1)

DOL LUMBER=1.00 NAIL=1.00 LS BEND=1.10 COMP=1.10 SHEAR=1.10 TENS= 1.10

COMPANION LIVE LOAD FACTOR = 1.00

TRUSS PLATE MANUFACTURER IS NOT RESPONSIBLE FOR QUALITY CONTROL IN THE TRUSS MANUFACTURING PLANT .

NAIL VALUES

PLATE	GRIP(DRY) (PSI) MAX	MIN	SHEAR (PLI) MAX	MIN	SECTION (PLI) MAX	MIN
MT20	650	371	1747	788	1987	1873

PLATE PLACEMENT TOL. = 0.250 inches

PLATE ROTATION TOL. = 5.0 Deg.

JSI GRIP= 0.89 (D) (INPUT = 0.90)
JSI METAL= 0.87 (B) (INPUT = 1.00)

JOB NAME	TRUSS NAME	QUANTITY	PLY	JOB DESC. Woodcreek / Adkins	DRWG NO.
211770	ST25	1	1	TRUSS DESC.	

KAMLOOPS TRUSS LTD., Kamloops, BC V2H 1G3

Version 8.420 S Mar 22 2021 MiTek Industries, Inc. Thu May 27 07:08:32 2021 Page 1

ID:X2qvwXGfFYBXzZFl6ldjmRzCaiR-P5IkTidaVqc3FzYrj?xG7QvRNNBcU000JJYYhFzCLUT

Scale = 1:83.9

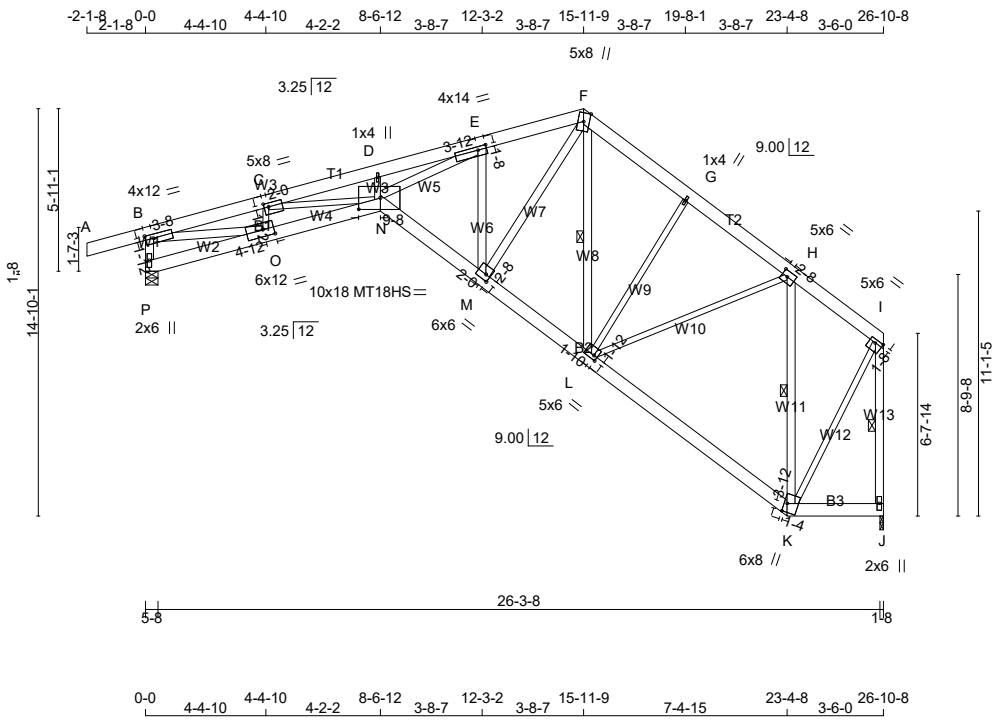

TOTAL WEIGHT = 185 lb

[M][F]

LUMBER

N. L. G. A. RULES

CHORDS	SIZE		LUMBER	DESCR.
P - B	2x4	DRY	1650F 1.5E	SPF
A - F	2x6	DRY	1650F 1.5E	SPF
F - I	2x6	DRY	1650F 1.5E	SPF
J - I	2x4	DRY	1650F 1.5E	SPF
P - N	2x6	DRY	1650F 1.5E	SPF
N - K	2x6	DRY	1650F 1.5E	SPF

DIMENSIONS, SUPPORTS AND LOADINGS SPECIFIED BY FABRICATOR TO BE VERIFIED BY BUILDING DESIGNER

BEARINGS

	FACTORED GROSS REACTION		MAXIMUM FACTORED GROSS REACTION			INPUT BRG	REQRD BRG
JT	VERT	HORZ	DOWN	HORZ	UPLIFT	IN-SX	IN-SX
P	2682	0	2682	0	0	5-8	2-15
J	2340	0	2340	0	0	1-8	4-2

ALLOW FOR 1.0" OF HORIZONTAL MOVEMENT DUE TO TOTAL LOAD

UNFACTORED REACTIONS

	1ST LCASE	MAX./MIN. COMPONENT REACTIONS					
JT	COMBINED	SNOW	LIVE	PERM.LIVE	WIND	DEAD	SOIL
P	1846	1501 / 0	0 / 0	0 / 0	0 / 0	344 / 0	0 / 0
J	1614	1291 / 0	0 / 0	0 / 0	0 / 0	323 / 0	0 / 0

BEARING MATERIAL TO BE SPF NO.2 OR BETTER AT JOINT(S) P

BRACING

TOP CHORD TO BE SHEATHED OR MAX. PURLIN SPACING = 2.58 FT.
MAX. UNBRACED BOTTOM CHORD LENGTH = 6.25 FT OR RIGID CEILING DIRECTLY APPLIED.

ALL PITCH BREAKS AND PERIMETER CORNER JOINTS MUST BE LATERALLY RESTRAINED.

1 LATERAL BRACE(S) AT 1/ 2 LENGTH OF F-L, H-K, I-J.

END VERTICAL(S) MUST BE SHEATHED OR HAVE BRACES AS INDICATED IN
THE MAX. UNBRACED LENGTH COLUMN OF THE TABLE BELOW

DESIGN CRITERIA

SPECIFIED LOADS:

TOP CH.	LL	=	48.1	PSF
	DL	=	5.0	PSF
BOT CH.	LL	=	0.0	PSF
	DL	=	7.0	PSF
TOTAL LOAD		=	60.0	PSF

SPACING = 24.0 IN. C/C

THIS TRUSS IS DESIGNED FOR RESIDENTIAL OR SMALL BUILDING REQUIREMENTS OF PART 9, NBCC 2015

THIS DESIGN COMPLIES WITH:
- PART 9 OF BCBC 2018 , ABC 2019
- PART 9 OF OBC 2012 (2019 AMENDMENT)
- CSA 086-14
- TPIC 2014

(55 % OF 83.6 P.S.F. G.S.L. PLUS 2.1 P.S.F. RAIN LOAD) EQUALS 48.1 P.S.F. SPECIFIED ROOF LIVE LOAD

ALLOWABLE DEFL.(LL)= L/180 (1.79")
CALCULATED VERT. DEFL.(LL) = L/ 497 (0.65")
ALLOWABLE DEFL.(TL)= L/180 (1.79")
CALCULATED VERT. DEFL.(TL) = L/ 315 (1.03")

CSI: TC=0.65/1.00 (C-D:1) , BC=0.66/1.00 (N-O:1) , WB=0.99/1.00 (E-N:1) , SSI=0.36/1.00 (D-E:1)

CONTINUED ON PAGE 2

JOB NAME	TRUSS NAME	QUANTITY	PLY	JOB DESC. Woodcreek / Adkins	DRWG NO.
211770	ST25	1	1	TRUSS DESC.	

KAMLOOPS TRUSS LTD., Kamloops, BC V2H 1G3

ID:X2qvwXGfFYBXzZFl6ldjmRzCaiR-P5IkTidaVgc3FzYrj?xG7QvRNNBcU000JJYYhFzCLUT

[illegible]
[illegible]
EXCEPT
[illegible]DRY
[illegible]DRY
[illegible]DRY
[illegible]DRY
[illegible]DRY
[illegible]DRY
[illegible]DRY

DRY: SEASONED LUMBER.

PLATES (table is in inches)

JT	TYPE	PLATES	W	LEN	Y	X
B	TMVW-t	MT20	4.0	12.0	1.75	3.50
C	TMWW-t	MT20	5.0	8.0	1.75	2.00
D	TMW+w	MT20	1.0	4.0		
E	TMWW-t	MT20	4.0	14.0	1.50	3.75
F	TTWW+m	MT20	5.0	8.0	Edge	
G	TMW+w	MT20	1.0	4.0		
H	TMWW-t	MT20	5.0	6.0	2.50	2.50
I	TMVW-t	MT20	5.0	6.0	1.50	Edge
J	BMV1+p	MT20	2.0	6.0		
K	BBWW+m	MT20	6.0	8.0	3.75	1.25
L	BMWWW-t	MT20	5.0	6.0	1.75	1.50
M	BMWW-t	MT20	6.0	6.0	2.50	2.00
N	BBWWW-p	MT18HS	10.0	18.0	5.00	9.50
O	BMWW-t	MT20	6.0	12.0	3.00	4.75
P	BMV1+p	MT20	2.0	6.0		

Edge - INDICATES REFERENCE CORNER OF PLATE TOUCHES EDGE OF CHORD.

LOADING

TOTAL LOAD CASES: (4)

C H O R D S

MEMB. FR-TO	MAX. FACTORED FORCE (LBS)	FACTORED VERT. LOAD (PLF) FROM	TO	LC1 MAX CSI (LC)	MAX. UNBRAC LENGTH
P- B	-2575 / 0	0.0	0.0	0.17 (1)	6.07
A- B	0 / 45	-156.6	-156.6	0.18 (1)	10.00
B- C	-7023 / 0	-156.6	-156.6	0.22 (1)	3.73
C- D	-10911 / 0	-156.6	-156.6	0.65 (1)	2.58
D- E	-10754 / 0	-156.6	-156.6	0.56 (1)	2.71
E- F	-3340 / 0	-156.6	-156.6	0.15 (1)	5.10
F- G	-2208 / 0	-156.6	-156.6	0.09 (1)	6.02
G- H	-2522 / 0	-156.6	-156.6	0.08 (1)	5.75
H- I	-1020 / 0	-156.6	-156.6	0.06 (1)	6.25
J- I	-2309 / 0	0.0	0.0	0.31 (1)	5.07
P- O	-18 / 0	-17.5	-17.5	0.12 (1)	6.25
O- N	0 / 7064	-17.5	-17.5	0.66 (1)	10.00
N- M	0 / 3996	-17.5	-17.5	0.31 (1)	10.00
M- L	0 / 2166	-17.5	-17.5	0.20 (1)	10.00
L- K	0 / 1014	-17.5	-17.5	0.11 (1)	10.00
K- J	0 / 0	-17.5	-17.5	0.02 (4)	10.00

W E B S

MEMB. FR-TO	MAX. FACTORED FORCE (LBS)	MAX CSI (LC)
B- O	0 / 6790	0.79 (1)
O- C	-2039 / 0	0.29 (1)
C- N	0 / 3677	0.83 (1)
N- D	-39 / 48	0.02 (4)
N- E	0 / 8467	0.99 (1)
M- E	-3385 / 0	0.70 (1)
M- F	0 / 2764	0.32 (1)
L- F	-631 / 0	0.17 (1)
L- G	-528 / 0	0.47 (1)
L- H	0 / 1319	0.30 (1)
K- H	-1987 / 0	0.52 (1)
K- I	0 / 1686	0.38 (1)

DOL LUMBER=1.00 NAIL=1.00 LS BEND=1.10 COMP=1.10 SHEAR=1.10
TENS= 1.10

COMPANION LIVE LOAD FACTOR = 1.00

TRUSS PLATE MANUFACTURER IS NOT RESPONSIBLE FOR QUALITY CONTROL IN THE TRUSS MANUFACTURING PLANT .

NAIL VALUES

PLATE	GRIP(DRY) (PSI) MAX	MIN	SHEAR (PLI) MAX	MIN	SECTION (PLI) MAX	MIN
MT20	650	371	1747	788	1987	1873
MT18HS	586	403	2455	1382	3163	3004

PLATE PLACEMENT TOL. = 0.250 inches

PLATE ROTATION TOL. = 5.0 Deg.

JSI GRIP= 0.90 (E) (INPUT = 0.90)
JSI METAL= 0.86 (B) (INPUT = 1.00)

JOB NAME	TRUSS NAME	QUANTITY	PLY	JOB DESC. Woodcreek / Adkins	DRWG NO.
211770	V1	1	1	TRUSS DESC.	

KAMLOOPS TRUSS LTD., Kamloops, BC V2H 1G3

ID:X2qvwXGfFYBXzZFl6IdjmRzCaiR-MTQUuNfq1HsmUHiEqQzkCr_qmAyHy40Jnd1fl7zCLUR

Scale = 1:25.3

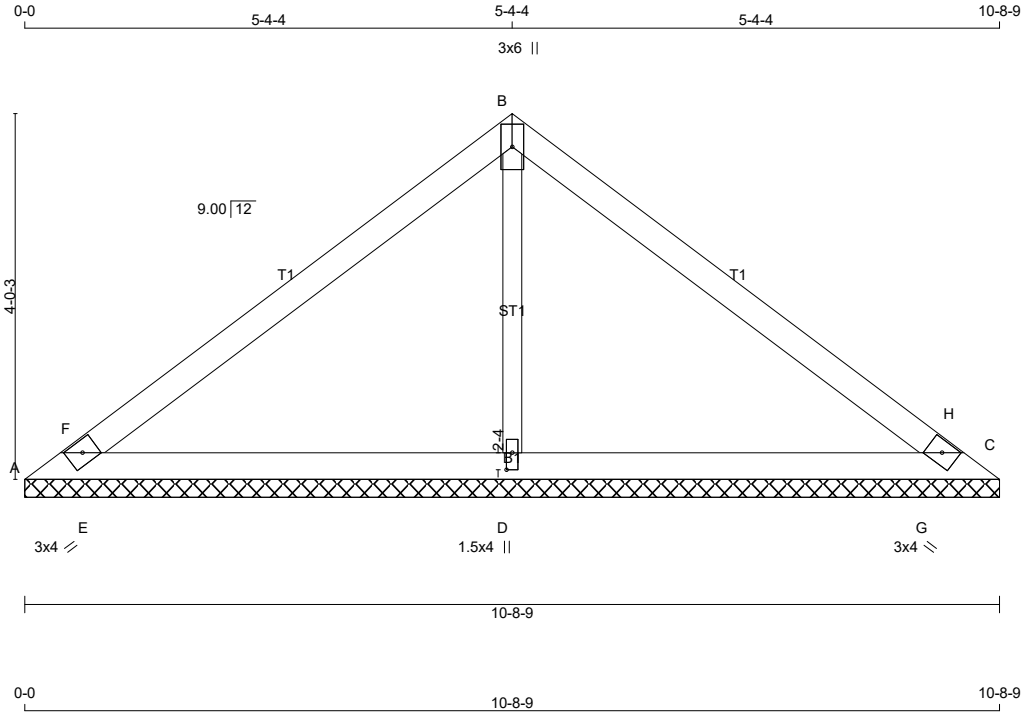

TOTAL WEIGHT = 29 lb

LUMBER

N. L. G. A. RULES

CHORDS	SIZE		LUMBER	DESCR.
A - B	2x4	DRY	1650F 1.5E	SPF
B - C	2x4	DRY	1650F 1.5E	SPF
A - C	2x4	DRY	1650F 1.5E	SPF
ALL WEBS	2x3	DRY	No.2	SPF

DIMENSIONS, SUPPORTS AND LOADINGS SPECIFIED BY FABRICATOR TO BE VERIFIED BY BUILDING DESIGNER

BEARINGS

JT	FACTORED GROSS REACTION VERT	HORZ	MAXIMUM GROSS REACTION DOWN	HORZ	UPLIFT	INPUT BRG	REQRD BRG
A	0	0	3	0	0	10-8-9	3-9
C	0	0	3	0	0	10-8-9	3-9
D	1867	0	1867	0	0	10-8-9	3-9

UNFACTORED REACTIONS

JT	1ST LCASE COMBINED	MAX./MIN. COMPONENT REACTIONS SNOW	LIVE	PERM.LIVE	WIND	DEAD	SOIL
A	0	0 / -2	0 / 0	0 / 0	0 / 0	2 / 0	0 / 0
C	0	0 / -2	0 / 0	0 / 0	0 / 0	2 / 0	0 / 0
D	1287	1034 / 0	0 / 0	0 / 0	0 / 0	253 / 0	0 / 0

BEARING MATERIAL TO BE SPF NO.2 OR BETTER AT JOINT(S) A, C, D

BRACING

TOP CHORD TO BE SHEATHED OR MAX. PURLIN SPACING = 10.00 FT.
MAX. UNBRACED BOTTOM CHORD LENGTH = 6.25 FT OR RIGID CEILING DIRECTLY APPLIED.

ALL PITCH BREAKS AND PERIMETER CORNER JOINTS MUST BE LATERALLY RESTRAINED.

[M]

DESIGN CRITERIA

SPECIFIED LOADS:

TOP CH.	LL	=	48.1	PSF
	DL	=	5.0	PSF
BOT CH.	LL	=	0.0	PSF
	DL	=	7.0	PSF
TOTAL LOAD		=	60.0	PSF

SPACING = 24.0 IN. C/C

THIS TRUSS IS DESIGNED FOR RESIDENTIAL OR SMALL BUILDING REQUIREMENTS OF PART 9, NBCC 2015

THIS DESIGN COMPLIES WITH:
- PART 9 OF BCBC 2018 , ABC 2019
- PART 9 OF OBC 2012 (2019 AMENDMENT)
- CSA 086-14
- TPIC 2014

(55 % OF 83.6 P.S.F. G.S.L. PLUS 2.1 P.S.F. RAIN LOAD) EQUALS 48.1 P.S.F. SPECIFIED ROOF LIVE LOAD

CSI: TC=0.46/1.00 (B-H:1) , BC=0.33/1.00 (D-G:1) , WB=0.38/1.00 (B-D:1) , SSI=0.29/1.00 (C-G:1)

DOL LUMBER=1.00 NAIL=1.00 LS BEND=1.10 COMP=1.10 SHEAR=1.10 TENS= 1.10

CONTINUED ON PAGE 2

JOB NAME	TRUSS NAME	QUANTITY	PLY	JOB DESC. Woodcreek / Adkins	DRWG NO.
211770	V1	1	1	TRUSS DESC.	

KAMLOOPS TRUSS LTD., Kamloops, BC V2H 1G3

ID:X2qvwXGfFYBXzZFl6IdjmRzCaiR-MTQUuNfq1HsmUHiEqQzkCr_qmAyHy40Jnd1fl7zCLUR

DRY: SEASONED LUMBER.

PLATES (table is in inches)

JT	TYPE	PLATES	W	LEN	Y	X
A	TBM1-h	MT20	3.0	4.0		
B	TTW+p	MT20	3.0	6.0		
C	TBM1-h	MT20	3.0	4.0		
D	BMW1+w	MT20	1.5	4.0	2.25	0.75

LOADING

TOTAL LOAD CASES: (4)

CHORDS

MEMB. FR-TO	MAX. FACTORED FORCE (LBS)	FACTORED VERT. LOAD LC1 (PLF) FROM	TO	MAX CSI (LC)	MAX. UNBRAC LENGTH
A- F	0 / 804	-156.6	-156.6	0.31 (1)	10.00
F- B	0 / 748	-156.6	-156.6	0.46 (1)	10.00
B- H	0 / 748	-156.6	-156.6	0.46 (1)	10.00
H- C	0 / 804	-156.6	-156.6	0.31 (1)	10.00
A- E	-700 / 0	-17.5	-17.5	0.32 (1)	6.25
E- D	-618 / 0	-17.5	-17.5	0.33 (1)	6.25
D- G	-618 / 0	-17.5	-17.5	0.33 (1)	6.25
G- C	-700 / 0	-17.5	-17.5	0.32 (1)	6.25

WEBS

MEMB. FR-TO	MAX. FACTORED FORCE (LBS)	MAX CSI (LC)
D- B	-1567 / 0	0.38 (1)
E- F	-556 / 0	0.00 (1)
G- H	-556 / 0	0.00 (1)

COMPANION LIVE LOAD FACTOR = 1.00

TRUSS PLATE MANUFACTURER IS NOT RESPONSIBLE FOR QUALITY CONTROL IN THE TRUSS MANUFACTURING PLANT .

NAIL VALUES

PLATE	GRIP(DRY) (PSI) MAX	MIN	SHEAR (PLI) MAX	MIN	SECTION (PLI) MAX	MIN
MT20	650	371	1747	788	1987	1873

PLATE PLACEMENT TOL. = 0.250 inches

PLATE ROTATION TOL. = 5.0 Deg.

JSI GRIP= 0.89 (D) (INPUT = 0.90)
JSI METAL= 0.44 (D) (INPUT = 1.00)

JOB NAME	TRUSS NAME	QUANTITY	PLY	JOB DESC. Woodcreek / Adkins	DRWG NO.
211770	V2	1	1	TRUSS DESC.	

KAMLOOPS TRUSS LTD., Kamloops, BC V2H 1G3

ID:X2qvwXGfFYBXzZFl6ldjmRzCaiR-qgzs5jfSob_d6QHQO8Vzl3X48aKRhbPS0HmCHZzCLUQ

Scale = 1:17.4

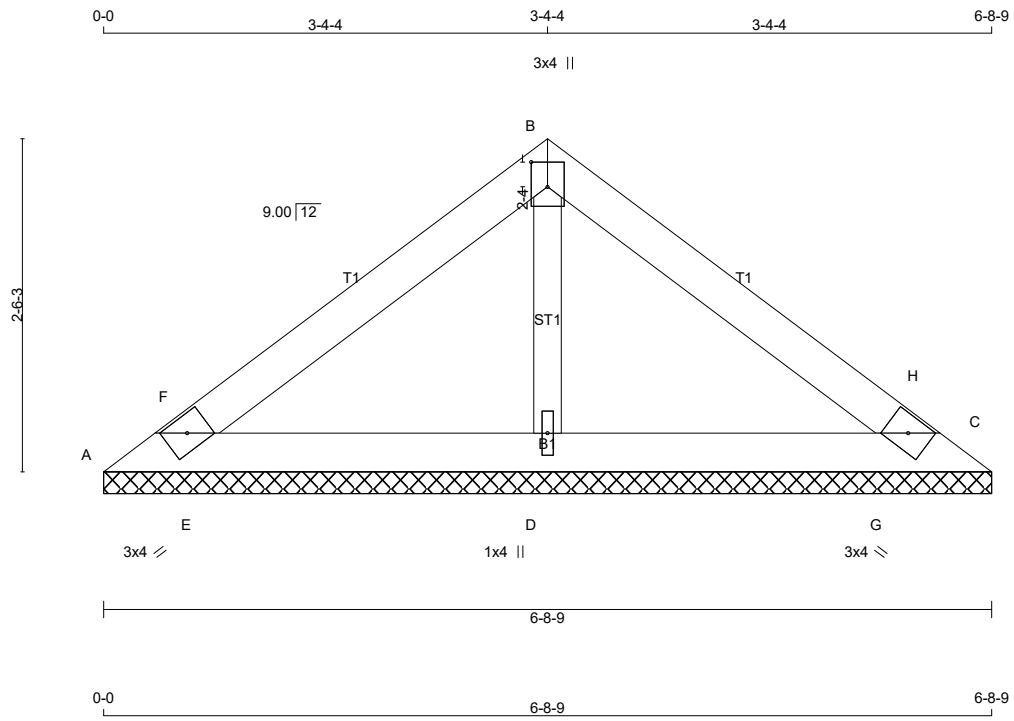

TOTAL WEIGHT = 18 lb

LUMBER

N. L. G. A. RULES

CHORDS	SIZE		LUMBER	DESCR.
A - B	2x4	DRY	1650F 1.5E	SPF
B - C	2x4	DRY	1650F 1.5E	SPF
A - C	2x4	DRY	1650F 1.5E	SPF
ALL WEBS	2x3	DRY	No.2	SPF

DIMENSIONS, SUPPORTS AND LOADINGS SPECIFIED BY FABRICATOR TO BE VERIFIED BY BUILDING DESIGNER

BEARINGS

JT	FACTORED GROSS REACTION VERT	HORZ	MAXIMUM GROSS REACTION DOWN	FACTORED HORZ	UPLIFT	INPUT BRG IN-SX	REQRD BRG IN-SX
A	118	0	118	0	0	6-8-9	1-8
C	118	0	118	0	0	6-8-9	1-8
D	934	0	934	0	0	6-8-9	1-8

UNFACTORED REACTIONS

JT	1ST LCASE COMBINED	MAX./MIN. COMPONENT REACTIONS SNOW	LIVE	PERM.LIVE	WIND	DEAD	SOIL
A	81	66 / 0	0 / 0	0 / 0	0 / 0	15 / 0	0 / 0
C	81	66 / 0	0 / 0	0 / 0	0 / 0	15 / 0	0 / 0
D	644	514 / 0	0 / 0	0 / 0	0 / 0	130 / 0	0 / 0

BEARING MATERIAL TO BE SPF NO.2 OR BETTER AT JOINT(S) A, C, D

BRACING

TOP CHORD TO BE SHEATHED OR MAX. PURLIN SPACING = 10.00 FT.
MAX. UNBRACED BOTTOM CHORD LENGTH = 6.25 FT OR RIGID CEILING DIRECTLY APPLIED.

ALL PITCH BREAKS AND PERIMETER CORNER JOINTS MUST BE LATERALLY RESTRAINED.

[M]

DESIGN CRITERIA

SPECIFIED LOADS:

TOP CH.	LL	=	48.1	PSF
	DL	=	5.0	PSF
BOT CH.	LL	=	0.0	PSF
	DL	=	7.0	PSF
TOTAL LOAD		=	60.0	PSF

SPACING = 24.0 IN. C/C

THIS TRUSS IS DESIGNED FOR RESIDENTIAL OR SMALL BUILDING REQUIREMENTS OF PART 9, NBCC 2015

THIS DESIGN COMPLIES WITH:
- PART 9 OF BCBC 2018 , ABC 2019
- PART 9 OF OBC 2012 (2019 AMENDMENT)
- CSA 086-14
- TPIC 2014

(55 % OF 83.6 P.S.F. G.S.L. PLUS 2.1 P.S.F. RAIN LOAD) EQUALS 48.1 P.S.F. SPECIFIED ROOF LIVE LOAD

CSI: TC=0.16/1.00 (B-H:1) , BC=0.14/1.00 (D-G:1) , WB=0.11/1.00 (B-D:1) , SSI=0.14/1.00 (B-H:1)

DOL LUMBER=1.00 NAIL=1.00 LS BEND=1.10 COMP=1.10 SHEAR=1.10 TENS= 1.10

CONTINUED ON PAGE 2

JOB NAME	TRUSS NAME	QUANTITY	PLY	JOB DESC. Woodcreek / Adkins	DRWG NO.
211770	V2	1	1	TRUSS DESC.	

KAMLOOPS TRUSS LTD., Kamloops, BC V2H 1G3

Version 8.420 S Mar 22 2021 MiTek Industries, Inc. Thu May 27 07:08:36 2021 Page 2

ID:X2qvwXGfFYBXzZFI6ldjmRzCaiR-lsXEI3g5Zu6Ujascyr0CHG4Fu_ggQ2fcExWlq0zCLUP

DRY: SEASONED LUMBER.

PLATES (table is in inches)

JT	TYPE	PLATES	W	LEN	Y	X
A	TBM1-h	MT20	3.0	4.0		
B	TTW+p	MT20	3.0	4.0	2.25	1.50
C	TBM1-h	MT20	3.0	4.0		
D	BMW1+w	MT20	1.0	4.0		

LOADING

TOTAL LOAD CASES: (4)

C H O R D S

MEMB. FR-TO	MAX. FACTORED FORCE (LBS)	FACTORED VERT. LOAD LC1 (PLF) FROM	TO	MAX CSI (LC)	MAX. UNBRAC LENGTH
A- F	0 / 266	-156.6	-156.6	0.07 (1)	10.00
F- B	0 / 267	-156.6	-156.6	0.16 (1)	10.00
B- H	0 / 267	-156.6	-156.6	0.16 (1)	10.00
H- C	0 / 266	-156.6	-156.6	0.07 (1)	10.00
A- E	-255 / 0	-17.5	-17.5	0.14 (1)	6.25
E- D	-220 / 0	-17.5	-17.5	0.14 (1)	6.25
D- G	-220 / 0	-17.5	-17.5	0.14 (1)	6.25
G- C	-255 / 0	-17.5	-17.5	0.14 (1)	6.25

W E B S

MEMB. FR-TO	MAX. FACTORED FORCE (LBS)	MAX CSI (LC)
D- B	-712 / 0	0.11 (1)
E- F	-266 / 0	0.00 (1)
G- H	-266 / 0	0.00 (1)

COMPANION LIVE LOAD FACTOR = 1.00

TRUSS PLATE MANUFACTURER IS NOT RESPONSIBLE FOR QUALITY CONTROL IN THE TRUSS MANUFACTURING PLANT .

NAIL VALUES

PLATE	GRIP(DRY) (PSI) MAX	MIN	SHEAR (PLI) MAX	MIN	SECTION (PLI) MAX	MIN
MT20	650	371	1747	788	1987	1873

PLATE PLACEMENT TOL. = 0.250 inches

PLATE ROTATION TOL. = 5.0 Deg.

JSI GRIP= 0.71 (D) (INPUT = 0.90)
JSI METAL= 0.30 (D) (INPUT = 1.00)

JOB NAME	TRUSS NAME	QUANTITY	PLY	JOB DESC. Woodcreek / Adkins	DRWG NO.
211770	V3	1	1	TRUSS DESC.	

KAMLOOPS TRUSS LTD., Kamloops, BC V2H 1G3

ID:X2qvwXGfFYBXzZFl6ldjmRzCaiR-m25dWPhjKCELLkQpVZXRqUcNYO_t9VelTbFJMSzCLUO

Scale = 1:27.9

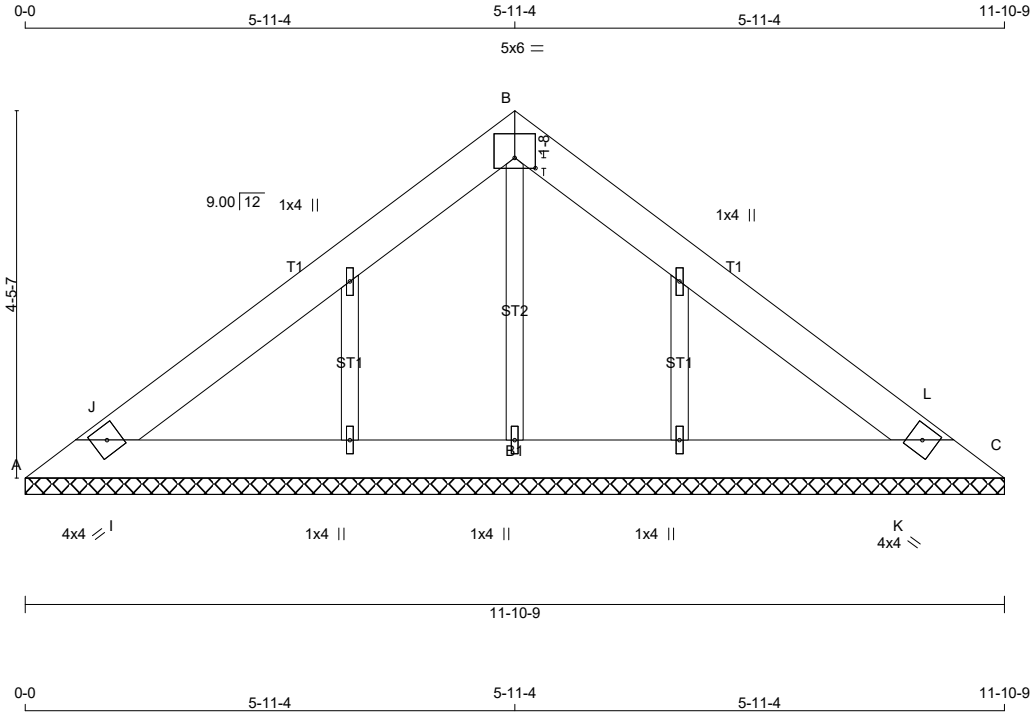

TOTAL WEIGHT = 51 lb

LUMBER

N. L. G. A. RULES

CHORDS	SIZE		LUMBER	DESCR.
A - B	2x6	DRY	1650F 1.5E	SPF
B - C	2x6	DRY	1650F 1.5E	SPF
A - C	2x6	DRY	1650F 1.5E	SPF
ALL GABLE WEBS				
	2x3	DRY	No.2	SPF

DIMENSIONS, SUPPORTS AND LOADINGS SPECIFIED BY FABRICATOR TO BE VERIFIED BY BUILDING DESIGNER

BEARINGS

JT	FACTORED GROSS REACTION VERT	HORZ	MAXIMUM GROSS REACTION DOWN	FACTORED HORZ	UPLIFT	INPUT BRG IN-SX	REQRD BRG IN-SX
A	1034	0	1034	0	0	11-10-9	1-8
C	1034	0	1034	0	0	11-10-9	1-8

UNFACTORED REACTIONS

JT	1ST LCASE COMBINED	MAX./MIN. COMPONENT REACTIONS SNOW	LIVE	PERM.LIVE	WIND	DEAD	SOIL
A	713	571 / 0	0 / 0	0 / 0	0 / 0	143 / 0	0 / 0
C	713	571 / 0	0 / 0	0 / 0	0 / 0	143 / 0	0 / 0

BEARING MATERIAL TO BE SPF NO.2 OR BETTER AT JOINT(S) A, C

BRACING

TOP CHORD TO BE SHEATHED OR MAX. PURLIN SPACING = 6.25 FT.
MAX. UNBRACED BOTTOM CHORD LENGTH = 10.00 FT OR RIGID CEILING DIRECTLY APPLIED.

ALL PITCH BREAKS AND PERIMETER CORNER JOINTS MUST BE LATERALLY RESTRAINED.

[M]

DESIGN CRITERIA

SPECIFIED LOADS:

TOP CH.	LL =	48.1	PSF
	DL =	5.0	PSF
BOT CH.	LL =	0.0	PSF
	DL =	7.0	PSF
TOTAL LOAD	=	60.0	PSF

SPACING = 24.0 IN. C/C

THIS TRUSS IS DESIGNED FOR RESIDENTIAL OR SMALL BUILDING REQUIREMENTS OF PART 9, NBCC 2015

THIS DESIGN COMPLIES WITH:
- PART 9 OF BCBC 2018 , ABC 2019
- PART 9 OF OBC 2012 (2019 AMENDMENT)
- CSA 086-14
- TPIC 2014

(55 % OF 83.6 P.S.F. G.S.L. PLUS 2.1 P.S.F. RAIN LOAD) EQUALS 48.1 P.S.F. SPECIFIED ROOF LIVE LOAD

CSI: TC=0.36/1.00 (B-J:1) , BC=0.27/1.00 (I-K:1) , WB=0.00/1.00 (I-J:1) , SSI=0.31/1.00 (A-J:1)

DOL LUMBER=1.00 NAIL=1.00 LS BEND=1.10 COMP=1.10 SHEAR=1.10 TENS= 1.10

CONTINUED ON PAGE 2

JOB NAME	TRUSS NAME	QUANTITY	PLY	JOB DESC. Woodcreek / Adkins	DRWG NO.
211770	V3	1	1	TRUSS DESC.	

DRY: SEASONED LUMBER.

GABLE STUDS SPACED AT 2-0-0 OC.

PLATES (table is in inches)

JT	TYPE	PLATES	W	LEN	Y	X
A	TBM1-h	MT20	4.0	4.0		
B	TTW-p	MT20	5.0	6.0	1.50	3.00
C	TBM1-h	MT20	4.0	4.0		
D, E, F, G, H						
D	NP+w	MT20	1.0	4.0		

LOADING
TOTAL LOAD CASES: (4)

CHORDS

MEMB. FR-TO	MAX. FACTORED FORCE (LBS)	FACTORED VERT. LOAD LC1 (PLF) FROM	TO	MAX CSI (LC)	MAX. UNBRAC LENGTH
A- J	-955 / 0	-156.6	-156.6	0.27 (1)	6.25
J- B	-749 / 0	-156.6	-156.6	0.36 (1)	6.25
B- L	-749 / 0	-156.6	-156.6	0.36 (1)	6.25
L- C	-955 / 0	-156.6	-156.6	0.27 (1)	6.25
A- I	0 / 623	-17.5	-17.5	0.18 (1)	10.00
I- K	0 / 657	-17.5	-17.5	0.27 (1)	10.00
K- C	0 / 623	-17.5	-17.5	0.18 (1)	10.00

WEBS

MEMB. FR-TO	MAX. FACTORED FORCE (LBS)	MAX CSI (LC)
I- J	-22 / 152	0.00 (1)
K- L	-22 / 152	0.00 (1)

COMPANION LIVE LOAD FACTOR = 1.00

TRUSS PLATE MANUFACTURER IS NOT RESPONSIBLE FOR QUALITY CONTROL IN THE TRUSS MANUFACTURING PLANT .

NAIL VALUES

PLATE	GRIP(DRY) (PSI) MAX	MIN	SHEAR (PLI) MAX	MIN	SECTION (PLI) MAX	MIN
MT20	650	371	1747	788	1987	1873

PLATE PLACEMENT TOL. = 0.250 inches

PLATE ROTATION TOL. = 5.0 Deg.

JSI GRIP= 0.44 (A) (INPUT = 0.90)
JSI METAL= 0.16 (A) (INPUT = 1.00)

JOB NAME	TRUSS NAME	QUANTITY	PLY	JOB DESC. Woodcreek / Adkins	DRWG NO.
211770	V4	1	1	TRUSS DESC.	

KAMLOOPS TRUSS LTD., Kamloops, BC V2H 1G3

Version 8.420 S Mar 22 2021 MiTek Industries, Inc. Thu May 27 07:08:39 2021 Page 1

ID:X2qvwXGfFYBXzZFI6ldjmRzCaiR-iRDNx5izrpV3a2aBdzZvvvigSBfpdIw2wvkQQLzCLUM

Scale = 1:27.0

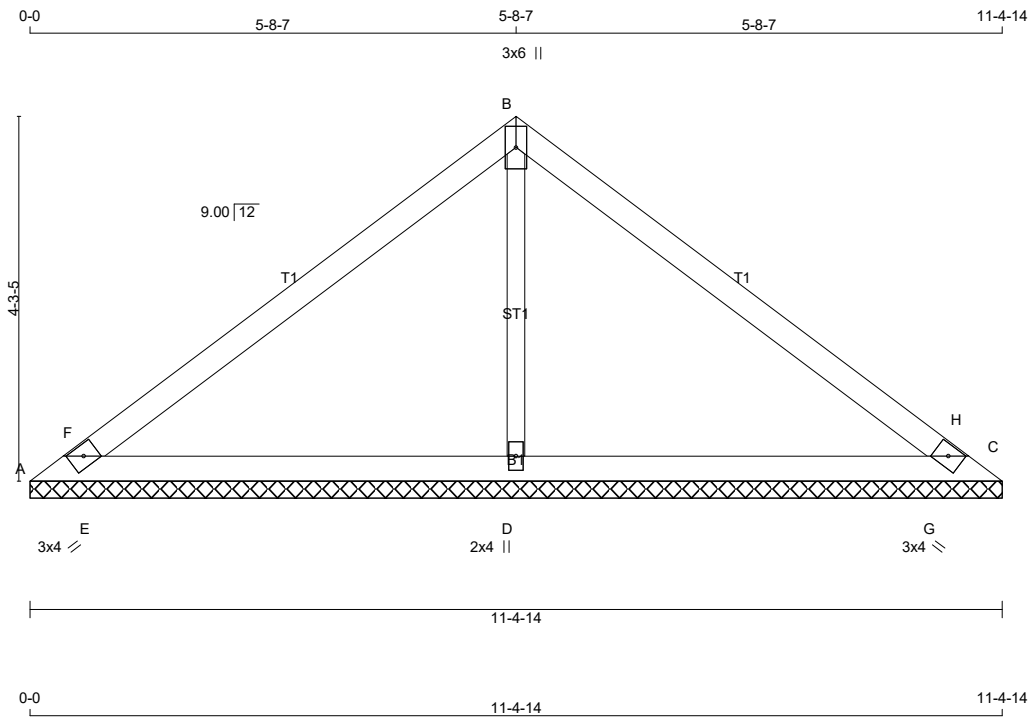

TOTAL WEIGHT = 31 lb

[M]

LUMBER

N. L. G. A. RULES

CHORDS	SIZE		LUMBER	DESCR.
A - B	2x4	DRY	1650F 1.5E	SPF
B - C	2x4	DRY	1650F 1.5E	SPF
A - C	2x4	DRY	1650F 1.5E	SPF
ALL WEBS	2x3	DRY	No.2	SPF

DIMENSIONS, SUPPORTS AND LOADINGS SPECIFIED BY FABRICATOR TO BE VERIFIED BY BUILDING DESIGNER

BEARINGS

JT	FACTORED GROSS REACTION VERT	HORZ	MAXIMUM GROSS REACTION DOWN	HORZ	FACTORED UPLIFT	INPUT BRG IN-SX	REQRD BRG IN-SX
A	-36	0	0	0	-36	11-4-14	4-3
C	-36	0	0	0	-36	11-4-14	4-3
D	2058	0	2058	0	0	11-4-14	4-3

PROVIDE ANCHORAGE AT BEARING JOINT A FOR 150 LBS FACTORED UPLIFT
PROVIDE ANCHORAGE AT BEARING JOINT C FOR 150 LBS FACTORED UPLIFT

UNFACTORED REACTIONS

JT	1ST LCASE COMBINED	MAX./MIN. COMPONENT REACTIONS SNOW	LIVE	PERM.LIVE	WIND	DEAD	SOIL
A	-24	0 / -22	0 / 0	0 / 0	0 / 0	0 / -2	0 / 0
C	-24	0 / -22	0 / 0	0 / 0	0 / 0	0 / -2	0 / 0
D	1418	1140 / 0	0 / 0	0 / 0	0 / 0	278 / 0	0 / 0

BEARING MATERIAL TO BE SPF NO.2 OR BETTER AT JOINT(S) A, C, D

BRACING

TOP CHORD TO BE SHEATHED OR MAX. PURLIN SPACING = 10.00 FT.
MAX. UNBRACED BOTTOM CHORD LENGTH = 6.25 FT OR RIGID CEILING DIRECTLY APPLIED.

ALL PITCH BREAKS AND PERIMETER CORNER JOINTS MUST BE LATERALLY RESTRAINED.

DESIGN CRITERIA

SPECIFIED LOADS:

TOP CH.	LL	=	48.1	PSF
	DL	=	5.0	PSF
BOT CH.	LL	=	0.0	PSF
	DL	=	7.0	PSF
TOTAL LOAD		=	60.0	PSF

SPACING = 24.0 IN. C/C

THIS TRUSS IS DESIGNED FOR RESIDENTIAL OR SMALL BUILDING REQUIREMENTS OF PART 9, NBCC 2015

THIS DESIGN COMPLIES WITH:
- PART 9 OF BCBC 2018 , ABC 2019
- PART 9 OF OBC 2012 (2019 AMENDMENT)
- CSA 086-14
- TPIC 2014

(55 % OF 83.6 P.S.F. G.S.L. PLUS 2.1 P.S.F. RAIN LOAD) EQUALS 48.1 P.S.F. SPECIFIED ROOF LIVE LOAD

CSI: TC=0.53/1.00 (B-F:1) , BC=0.37/1.00 (D-E:1) , WB=0.46/1.00 (B-D:1) , SSI=0.32/1.00 (A-E:1)

DOL LUMBER=1.00 NAIL=1.00 LS BEND=1.10 COMP=1.10 SHEAR=1.10 TENS= 1.10

CONTINUED ON PAGE 2

JOB NAME	TRUSS NAME	QUANTITY	PLY	JOB DESC. Woodcreek / Adkins	DRWG NO.
211770	V4	1	1	TRUSS DESC.	

KAMLOOPS TRUSS LTD., Kamloops, BC V2H 1G3

Version 8.420 S Mar 22 2021 MiTek Industries, Inc. Thu May 27 07:08:39 2021 Page 2

ID:X2qvwXGfFYBXzZFI6ldjmRzCaiR-iRDNx5izrpV3a2aBdzZvvvigSBfpdIw2wvkQQLzCLUM

DRY: SEASONED LUMBER.

PLATES (table is in inches)

JT	TYPE	PLATES	W	LEN	Y	X
A	TBM1-h	MT20	3.0	4.0		
B	TTW+p	MT20	3.0	6.0		
C	TBM1-h	MT20	3.0	4.0		
D	BMW1+w	MT20	2.0	4.0		

LOADING

TOTAL LOAD CASES: (4)

CHORDS

MEMB. FR-TO	MAX. FACTORED FORCE (LBS)	FACTORED VERT. LOAD LC1 (PLF) FROM	TO	MAX CSI (LC)	MAX. UNBRAC LENGTH
A- F	0 / 926	-156.6	-156.6	0.36 (1)	10.00
F- B	0 / 855	-156.6	-156.6	0.53 (1)	10.00
B- H	0 / 855	-156.6	-156.6	0.53 (1)	10.00
H- C	0 / 926	-156.6	-156.6	0.36 (1)	10.00
A- E	-798 / 0	-17.5	-17.5	0.36 (1)	6.25
E- D	-706 / 0	-17.5	-17.5	0.37 (1)	6.25
D- G	-706 / 0	-17.5	-17.5	0.37 (1)	6.25
G- C	-798 / 0	-17.5	-17.5	0.36 (1)	6.25

WEBS

MEMB. FR-TO	MAX. FACTORED FORCE (LBS)	MAX CSI (LC)
D- B	-1743 / 0	0.46 (1)
E- F	-618 / 0	0.00 (1)
G- H	-618 / 0	0.00 (1)

COMPANION LIVE LOAD FACTOR = 1.00

TRUSS PLATE MANUFACTURER IS NOT RESPONSIBLE FOR QUALITY CONTROL IN THE TRUSS MANUFACTURING PLANT .

NAIL VALUES

PLATE	GRIP(DRY) (PSI) MAX	MIN	SHEAR (PLI) MAX	MIN	SECTION (PLI) MAX	MIN
MT20	650	371	1747	788	1987	1873

PLATE PLACEMENT TOL. = 0.250 inches

PLATE ROTATION TOL. = 5.0 Deg.

JSI GRIP= 0.87 (D) (INPUT = 0.90)
JSI METAL= 0.37 (D) (INPUT = 1.00)

JOB NAME	TRUSS NAME	QUANTITY	PLY	JOB DESC. Woodcreek / Adkins	DRWG NO.
211770	V5	1	1	TRUSS DESC.	

KAMLOOPS TRUSS LTD., Kamloops, BC V2H 1G3

Version 8.420 S Mar 22 2021 MiTek Industries, Inc. Thu May 27 07:08:40 2021 Page 1

ID:X2qvwXGfFYBXzZFl6IdjmRzCaiR-Adnl8Rjbc7dwCC9NBh48S6EtHb0KMohB9ZUzznzCLUL

Scale = 1:24.3

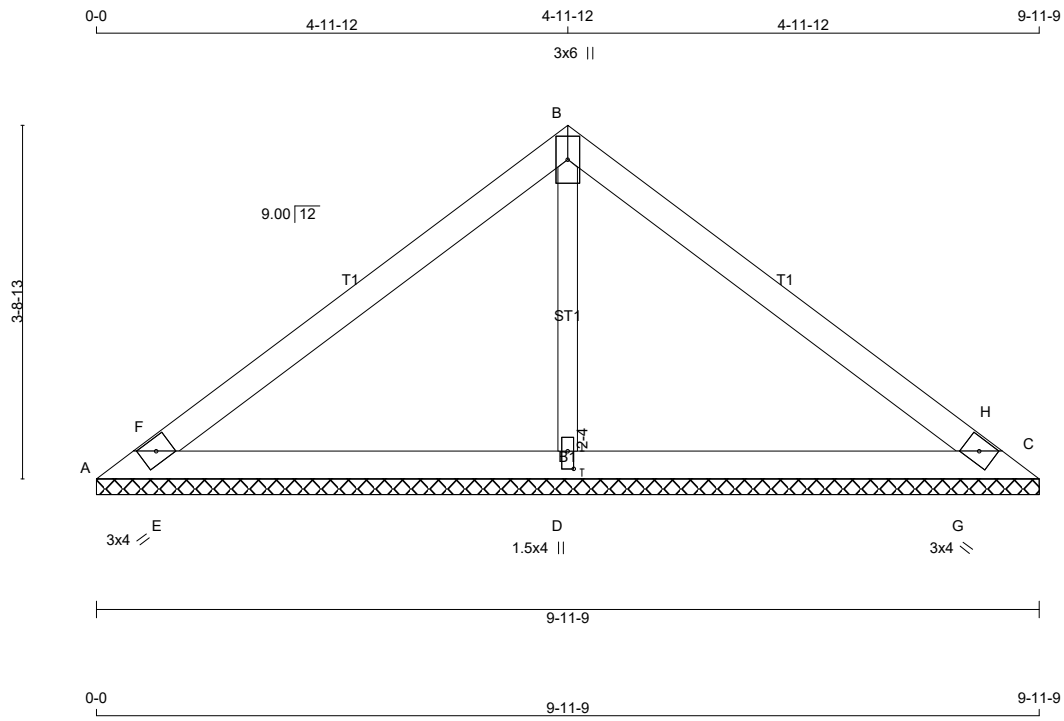

TOTAL WEIGHT = 27 lb

[M]

LUMBER

N. L. G. A. RULES

CHORDS	SIZE		LUMBER	DESCR.
A - B	2x4	DRY	1650F 1.5E	SPF
B - C	2x4	DRY	1650F 1.5E	SPF
A - C	2x4	DRY	1650F 1.5E	SPF
ALL WEBS	2x3	DRY	No.2	SPF

DIMENSIONS, SUPPORTS AND LOADINGS SPECIFIED BY FABRICATOR TO BE VERIFIED BY BUILDING DESIGNER

BEARINGS

	FACTORED GROSS REACTION		MAXIMUM FACTORED GROSS REACTION			INPUT BRG	REQRD BRG
JT	VERT	HORZ	DOWN	HORZ	UPLIFT	IN-SX	IN-SX
A	32	0	32	0	0	9-11-9	2-15
C	32	0	32	0	0	9-11-9	2-15
D	1671	0	1671	0	0	9-11-9	2-15

UNFACTORED REACTIONS

	1ST LCASE	MAX./MIN. COMPONENT REACTIONS					
JT	COMBINED	SNOW	LIVE	PERM.LIVE	WIND	DEAD	SOIL
A	22	17 / 0	0 / 0	0 / 0	0 / 0	6 / 0	0 / 0
C	22	17 / 0	0 / 0	0 / 0	0 / 0	6 / 0	0 / 0
D	1152	924 / 0	0 / 0	0 / 0	0 / 0	228 / 0	0 / 0

BEARING MATERIAL TO BE SPF NO.2 OR BETTER AT JOINT(S) A, C, D

BRACING

TOP CHORD TO BE SHEATHED OR MAX. PURLIN SPACING = 10.00 FT.
MAX. UNBRACED BOTTOM CHORD LENGTH = 6.25 FT OR RIGID CEILING DIRECTLY APPLIED.

ALL PITCH BREAKS AND PERIMETER CORNER JOINTS MUST BE LATERALLY RESTRAINED.

DESIGN CRITERIA

SPECIFIED LOADS:

TOP CH.	LL =	48.1	PSF
	DL =	5.0	PSF
BOT CH.	LL =	0.0	PSF
	DL =	7.0	PSF
TOTAL LOAD	=	60.0	PSF

SPACING = 24.0 IN. C/C

THIS TRUSS IS DESIGNED FOR RESIDENTIAL OR SMALL BUILDING REQUIREMENTS OF PART 9, NBCC 2015

THIS DESIGN COMPLIES WITH:
- PART 9 OF BCBC 2018 , ABC 2019
- PART 9 OF OBC 2012 (2019 AMENDMENT)
- CSA 086-14
- TPIC 2014

(55 % OF 83.6 P.S.F. G.S.L. PLUS 2.1 P.S.F. RAIN LOAD) EQUALS 48.1 P.S.F. SPECIFIED ROOF LIVE LOAD

CSI: TC=0.39/1.00 (B-F:1) , BC=0.29/1.00 (D-E:1) , WB=0.30/1.00 (B-D:1) , SSI=0.26/1.00 (A-E:1)

DOL LUMBER=1.00 NAIL=1.00 LS BEND=1.10 COMP=1.10 SHEAR=1.10 TENS= 1.10

CONTINUED ON PAGE 2

JOB NAME	TRUSS NAME	QUANTITY	PLY	JOB DESC. Woodcreek / Adkins	DRWG NO.
211770	V5	1	1	TRUSS DESC.	

KAMLOOPS TRUSS LTD., Kamloops, BC V2H 1G3

Version 8.420 S Mar 22 2021 MiTek Industries, Inc. Thu May 27 07:08:40 2021 Page 2

ID:X2qvwXGfFYBXzZFl6ldjmRzCaiR-Adnl8Rjbc7dwCC9NBh48S6EtHb0KMohB9ZUzznzCLUL

DRY: SEASONED LUMBER.

PLATES (table is in inches)

JT	TYPE	PLATES	W	LEN	Y	X
A	TBM1-h	MT20	3.0	4.0		
B	TTW+p	MT20	3.0	6.0		
C	TBM1-h	MT20	3.0	4.0		
D	BMW1+w	MT20	1.5	4.0	2.25	0.75

LOADING

TOTAL LOAD CASES: (4)

C H O R D S

MEMB. FR-TO	MAX. FACTORED FORCE (LBS)	FACTORED VERT. LOAD LC1 (PLF) FROM	TO	MAX CSI (LC)	MAX. UNBRAC LENGTH
A- F	0 / 682	-156.6	-156.6	0.25 (1)	10.00
F- B	0 / 640	-156.6	-156.6	0.39 (1)	10.00
B- H	0 / 640	-156.6	-156.6	0.39 (1)	10.00
H- C	0 / 682	-156.6	-156.6	0.25 (1)	10.00
A- E	-601 / 0	-17.5	-17.5	0.28 (1)	6.25
E- D	-529 / 0	-17.5	-17.5	0.29 (1)	6.25
D- G	-529 / 0	-17.5	-17.5	0.29 (1)	6.25
G- C	-601 / 0	-17.5	-17.5	0.28 (1)	6.25

W E B S

MEMB. FR-TO	MAX. FACTORED FORCE (LBS)	MAX CSI (LC)
D- B	-1386 / 0	0.30 (1)
E- F	-493 / 0	0.00 (1)
G- H	-493 / 0	0.00 (1)

COMPANION LIVE LOAD FACTOR = 1.00

TRUSS PLATE MANUFACTURER IS NOT RESPONSIBLE FOR QUALITY CONTROL IN THE TRUSS MANUFACTURING PLANT .

NAIL VALUES

PLATE	GRIP(DRY) (PSI) MAX	MIN	SHEAR (PLI) MAX	MIN	SECTION (PLI) MAX	MIN
MT20	650	371	1747	788	1987	1873

PLATE PLACEMENT TOL. = 0.250 inches

PLATE ROTATION TOL. = 5.0 Deg.

JSI GRIP= 0.79 (D) (INPUT = 0.90)
JSI METAL= 0.39 (D) (INPUT = 1.00)

JOB NAME	TRUSS NAME	QUANTITY	PLY	JOB DESC. Woodcreek / Adkins	DRWG NO.
211770	V6	1	1	TRUSS DESC.	

KAMLOOPS TRUSS LTD., Kamloops, BC V2H 1G3

ID:X2qvwXGfFYBXzZFl6ldjmRzCaiR-70uWZ6lr8kteRVJml67cXXJFZPivqjrUdtz41fzCLUJ

Scale = 1:21.4

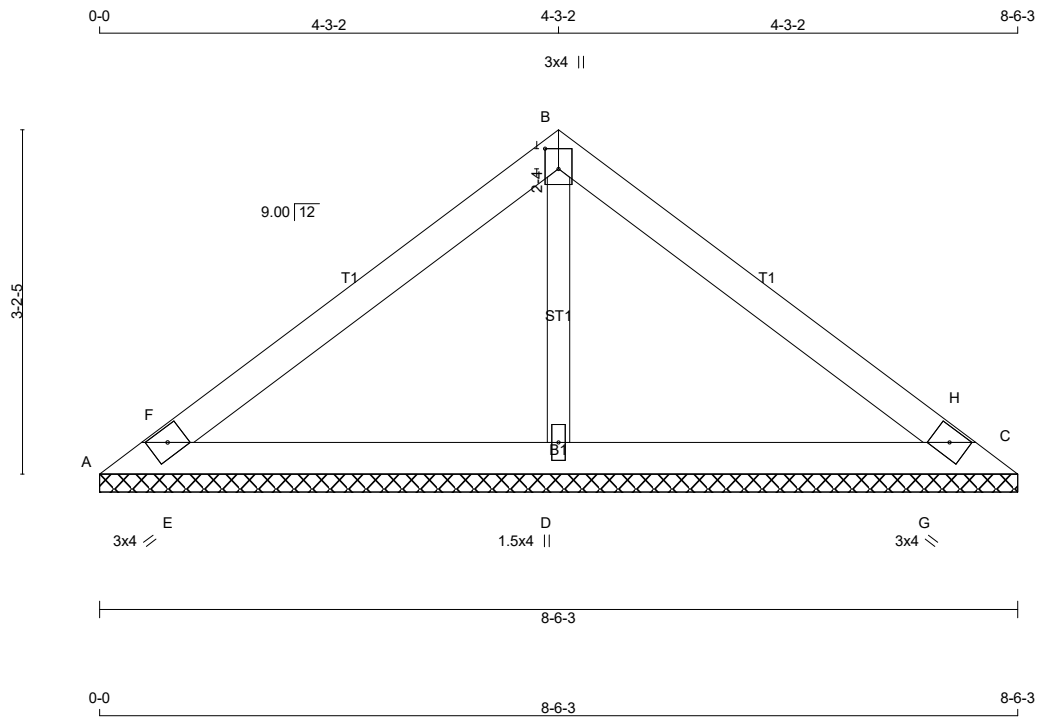

TOTAL WEIGHT = 23 lb

LUMBER

N. L. G. A. RULES

CHORDS	SIZE		LUMBER	DESCR.
A - B	2x4	DRY	1650F 1.5E	SPF
B - C	2x4	DRY	1650F 1.5E	SPF
A - C	2x4	DRY	1650F 1.5E	SPF
ALL WEBS	2x3	DRY	No.2	SPF

DIMENSIONS, SUPPORTS AND LOADINGS SPECIFIED BY FABRICATOR TO BE VERIFIED BY BUILDING DESIGNER

BEARINGS

JT	FACTORED GROSS REACTION VERT	HORZ	MAXIMUM FACTORED GROSS REACTION DOWN	HORZ	UPLIFT	INPUT BRG IN-SX	REQRD BRG IN-SX
A	81	0	81	0	0	8-6-3	1-13
C	81	0	81	0	0	8-6-3	1-13
D	1320	0	1320	0	0	8-6-3	1-13

UNFACTORED REACTIONS

JT	1ST LCASE COMBINED	MAX./MIN. COMPONENT REACTIONS SNOW	LIVE	PERM.LIVE	WIND	DEAD	SOIL
A	56	45 / 0	0 / 0	0 / 0	0 / 0	11 / 0	0 / 0
C	56	45 / 0	0 / 0	0 / 0	0 / 0	11 / 0	0 / 0
D	911	729 / 0	0 / 0	0 / 0	0 / 0	182 / 0	0 / 0

BEARING MATERIAL TO BE SPF NO.2 OR BETTER AT JOINT(S) A, C, D

BRACING

TOP CHORD TO BE SHEATHED OR MAX. PURLIN SPACING = 10.00 FT.
MAX. UNBRACED BOTTOM CHORD LENGTH = 6.25 FT OR RIGID CEILING DIRECTLY APPLIED.

ALL PITCH BREAKS AND PERIMETER CORNER JOINTS MUST BE LATERALLY RESTRAINED.

[M]

DESIGN CRITERIA

SPECIFIED LOADS:

TOP CH.	LL	=	48.1	PSF
	DL	=	5.0	PSF
BOT CH.	LL	=	0.0	PSF
	DL	=	7.0	PSF
TOTAL LOAD		=	60.0	PSF

SPACING = 24.0 IN. C/C

THIS TRUSS IS DESIGNED FOR RESIDENTIAL OR SMALL BUILDING REQUIREMENTS OF PART 9, NBCC 2015

THIS DESIGN COMPLIES WITH:
- PART 9 OF BCBC 2018 , ABC 2019
- PART 9 OF OBC 2012 (2019 AMENDMENT)
- CSA 086-14
- TPIC 2014

(55 % OF 83.6 P.S.F. G.S.L. PLUS 2.1 P.S.F. RAIN LOAD) EQUALS 48.1 P.S.F. SPECIFIED ROOF LIVE LOAD

CSI: TC=0.28/1.00 (B-F:1) , BC=0.22/1.00 (D-E:1) , WB=0.19/1.00 (B-D:1) , SSI=0.20/1.00 (A-E:1)

DOL LUMBER=1.00 NAIL=1.00 LS BEND=1.10 COMP=1.10 SHEAR=1.10 TENS= 1.10

CONTINUED ON PAGE 2

JOB NAME	TRUSS NAME	QUANTITY	PLY	JOB DESC. Woodcreek / Adkins	DRWG NO.
211770	V6	1	1	TRUSS DESC.	

KAMLOOPS TRUSS LTD., Kamloops, BC V2H 1G3

Version 8.420 S Mar 22 2021 MiTek Industries, Inc. Thu May 27 07:08:42 2021 Page 2

ID:X2qvwXGfFYBXzZFl6ldjmRzCaiR-70uWZ6lr8kteRVJml67cXXJFZPivqjrUdtz41fzCLUJ

DRY: SEASONED LUMBER.

PLATES (table is in inches)

JT	TYPE	PLATES	W	LEN	Y	X
A	TBM1-h	MT20	3.0	4.0		
B	TTW+p	MT20	3.0	4.0	2.25	1.50
C	TBM1-h	MT20	3.0	4.0		
D	BMW1+w	MT20	1.5	4.0		

LOADING

TOTAL LOAD CASES: (4)

C H O R D S

MEMB. FR-TO	MAX. FACTORED FORCE (LBS)	FACTORED VERT. LOAD LC1 (PLF) FROM	TO	MAX CSI (LC)	MAX. UNBRAC LENGTH
A- F	0 / 475	-156.6	-156.6	0.15 (1)	10.00
F- B	0 / 456	-156.6	-156.6	0.28 (1)	10.00
B- H	0 / 456	-156.6	-156.6	0.28 (1)	10.00
H- C	0 / 475	-156.6	-156.6	0.15 (1)	10.00
A- E	-431 / 0	-17.5	-17.5	0.22 (1)	6.25
E- D	-377 / 0	-17.5	-17.5	0.22 (1)	6.25
D- G	-377 / 0	-17.5	-17.5	0.22 (1)	6.25
G- C	-431 / 0	-17.5	-17.5	0.22 (1)	6.25

W E B S

MEMB. FR-TO	MAX. FACTORED FORCE (LBS)	MAX CSI (LC)
D- B	-1064 / 0	0.19 (1)
E- F	-383 / 0	0.00 (1)
G- H	-383 / 0	0.00 (1)

COMPANION LIVE LOAD FACTOR = 1.00

TRUSS PLATE MANUFACTURER IS NOT RESPONSIBLE FOR QUALITY CONTROL IN THE TRUSS MANUFACTURING PLANT .

NAIL VALUES

PLATE	GRIP(DRY) (PSI) MAX	MIN	SHEAR (PLI) MAX	MIN	SECTION (PLI) MAX	MIN
MT20	650	371	1747	788	1987	1873

PLATE PLACEMENT TOL. = 0.250 inches

PLATE ROTATION TOL. = 5.0 Deg.

JSI GRIP= 0.73 (B) (INPUT = 0.90)
JSI METAL= 0.30 (D) (INPUT = 1.00)

JOB NAME	TRUSS NAME	QUANTITY	PLY	JOB DESC. Woodcreek / Adkins	DRWG NO.
211770	V7	1	1	TRUSS DESC.	

KAMLOOPS TRUSS LTD., Kamloops, BC V2H 1G3

ID:X2qvwXGfFYBXzZFl6ldjmRzCaiR-3O0G_om6gM7MhpT9QX94cyPdYCPKIfQn4BSA6YzCLUH

Scale = 1:18.2

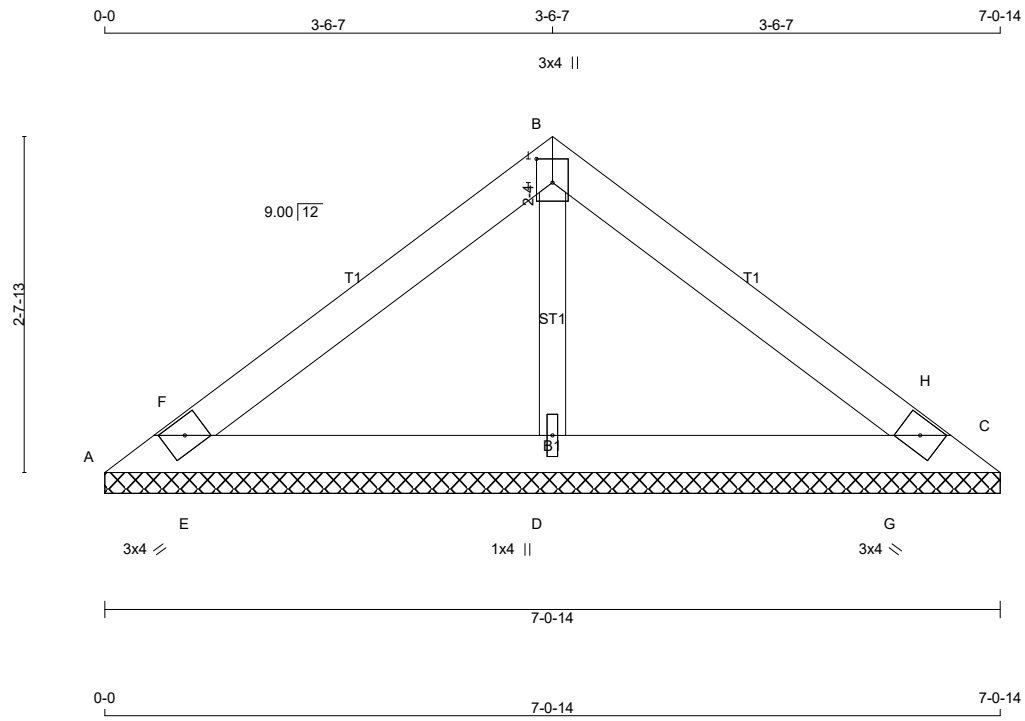

TOTAL WEIGHT = 19 lb

[M]

LUMBER

N. L. G. A. RULES

CHORDS	SIZE		LUMBER	DESCR.
A - B	2x4	DRY	1650F 1.5E	SPF
B - C	2x4	DRY	1650F 1.5E	SPF
A - C	2x4	DRY	1650F 1.5E	SPF
ALL WEBS	2x3	DRY	No.2	SPF

DIMENSIONS, SUPPORTS AND LOADINGS SPECIFIED BY FABRICATOR TO BE VERIFIED BY BUILDING DESIGNER

BEARINGS

JT	FACTORED GROSS REACTION VERT	HORZ	MAXIMUM FACTORED GROSS REACTION DOWN	HORZ	UPLIFT	INPUT BRG	REQRD BRG
A	113	0	113	0	0	7-0-14	1-8
C	113	0	113	0	0	7-0-14	1-8
D	1006	0	1006	0	0	7-0-14	1-8

UNFACTORED REACTIONS

JT	1ST LCASE COMBINED	MAX./MIN. COMPONENT REACTIONS SNOW	LIVE	PERM.LIVE	WIND	DEAD	SOIL
A	78	63 / 0	0 / 0	0 / 0	0 / 0	15 / 0	0 / 0
C	78	63 / 0	0 / 0	0 / 0	0 / 0	15 / 0	0 / 0
D	694	554 / 0	0 / 0	0 / 0	0 / 0	140 / 0	0 / 0

BEARING MATERIAL TO BE SPF NO.2 OR BETTER AT JOINT(S) A, C, D

BRACING

TOP CHORD TO BE SHEATHED OR MAX. PURLIN SPACING = 10.00 FT.
MAX. UNBRACED BOTTOM CHORD LENGTH = 6.25 FT OR RIGID CEILING DIRECTLY APPLIED.

ALL PITCH BREAKS AND PERIMETER CORNER JOINTS MUST BE LATERALLY RESTRAINED.

DESIGN CRITERIA

SPECIFIED LOADS:

TOP CH.	LL	=	48.1	PSF
	DL	=	5.0	PSF
BOT CH.	LL	=	0.0	PSF
	DL	=	7.0	PSF
TOTAL LOAD		=	60.0	PSF

SPACING = 24.0 IN. C/C

THIS TRUSS IS DESIGNED FOR RESIDENTIAL OR SMALL BUILDING REQUIREMENTS OF PART 9, NBCC 2015

THIS DESIGN COMPLIES WITH:
- PART 9 OF BCBC 2018 , ABC 2019
- PART 9 OF OBC 2012 (2019 AMENDMENT)
- CSA 086-14
- TPIC 2014

(55 % OF 83.6 P.S.F. G.S.L. PLUS 2.1 P.S.F. RAIN LOAD) EQUALS 48.1 P.S.F. SPECIFIED ROOF LIVE LOAD

CSI: TC=0.19/1.00 (B-F:1) , BC=0.16/1.00 (D-E:1) , WB=0.13/1.00 (B-D:1) , SSI=0.15/1.00 (B-F:1)

DOL LUMBER=1.00 NAIL=1.00 LS BEND=1.10 COMP=1.10 SHEAR=1.10 TENS= 1.10

CONTINUED ON PAGE 2

DRY: SEASONED LUMBER.

PLATES (table is in inches)

JT	TYPE	PLATES	W	LEN	Y	X
A	TBM1-h	MT20	3.0	4.0		
B	TTW+p	MT20	3.0	4.0	2.25	1.50
C	TBM1-h	MT20	3.0	4.0		
D	BMW1+w	MT20	1.0	4.0		

LOADING

TOTAL LOAD CASES: (4)

C H O R D S

MEMB. FR-TO	MAX. FACTORED FORCE (LBS)	FACTORED VERT. LOAD LC1 (PLF) FROM	TO	MAX CSI (LC)	MAX. UNBRAC LENGTH
A- F	0 / 304	-156.6	-156.6	0.08 (1)	10.00
F- B	0 / 301	-156.6	-156.6	0.19 (1)	10.00
B- H	0 / 301	-156.6	-156.6	0.19 (1)	10.00
H- C	0 / 304	-156.6	-156.6	0.08 (1)	10.00
A- E	-287 / 0	-17.5	-17.5	0.16 (1)	6.25
E- D	-248 / 0	-17.5	-17.5	0.16 (1)	6.25
D- G	-248 / 0	-17.5	-17.5	0.16 (1)	6.25
G- C	-287 / 0	-17.5	-17.5	0.16 (1)	6.25

W E B S

MEMB. FR-TO	MAX. FACTORED FORCE (LBS)	MAX CSI (LC)
D- B	-778 / 0	0.13 (1)
E- F	-288 / 0	0.00 (1)
G- H	-288 / 0	0.00 (1)

COMPANION LIVE LOAD FACTOR = 1.00

TRUSS PLATE MANUFACTURER IS NOT RESPONSIBLE FOR QUALITY CONTROL IN THE TRUSS MANUFACTURING PLANT .

NAIL VALUES

PLATE	GRIP(DRY) (PSI) MAX	MIN	SHEAR (PLI) MAX	MIN	SECTION (PLI) MAX	MIN
MT20	650	371	1747	788	1987	1873

PLATE PLACEMENT TOL. = 0.250 inches

PLATE ROTATION TOL. = 5.0 Deg.

JSI GRIP= 0.78 (D) (INPUT = 0.90)
JSI METAL= 0.33 (D) (INPUT = 1.00)

JOB NAME	TRUSS NAME	QUANTITY	PLY	JOB DESC. Woodcreek / Adkins	DRWG NO.
211770	V8	1	1	TRUSS DESC.	

KAMLOOPS TRUSS LTD., Kamloops, BC V2H 1G3

Version 8.420 S Mar 22 2021 MiTek Industries, Inc. Thu May 27 07:08:45 2021 Page 1

ID:X2qvwXGfFYBXzZFI6ldjmRzCaiR-XbaeB8nkRfFCJz2LzEgJ9AxpUcmN16QwJrBke_zCLUG

Scale = 1:15.3

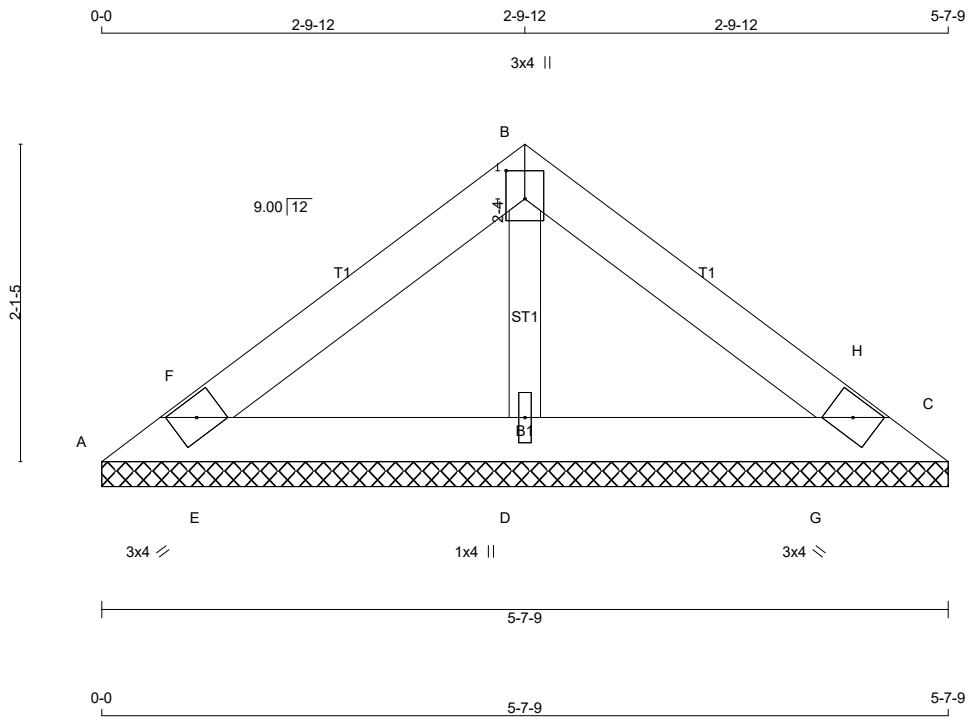

TOTAL WEIGHT = 15 lb

LUMBER

N. L. G. A. RULES

CHORDS	SIZE		LUMBER	DESCR.
A - B	2x4	DRY	1650F 1.5E	SPF
B - C	2x4	DRY	1650F 1.5E	SPF
A - C	2x4	DRY	1650F 1.5E	SPF
ALL WEBS	2x3	DRY	No.2	SPF

DIMENSIONS, SUPPORTS AND LOADINGS SPECIFIED BY FABRICATOR TO BE VERIFIED BY BUILDING DESIGNER

BEARINGS

JT	FACTORED GROSS REACTION VERT	HORZ	MAXIMUM GROSS REACTION DOWN	HORZ	UPLIFT	INPUT BRG	REQRD BRG
A	125	0	125	0	0	5-7-9	1-8
C	125	0	125	0	0	5-7-9	1-8
D	729	0	729	0	0	5-7-9	1-8

UNFACTORED REACTIONS

JT	1ST LCASE COMBINED	MAX./MIN. COMPONENT REACTIONS SNOW	LIVE	PERM.LIVE	WIND	DEAD	SOIL
A	86	70 / 0	0 / 0	0 / 0	0 / 0	16 / 0	0 / 0
C	86	70 / 0	0 / 0	0 / 0	0 / 0	16 / 0	0 / 0
D	503	401 / 0	0 / 0	0 / 0	0 / 0	103 / 0	0 / 0

BEARING MATERIAL TO BE SPF NO.2 OR BETTER AT JOINT(S) A, C, D

BRACING

TOP CHORD TO BE SHEATHED OR MAX. PURLIN SPACING = 10.00 FT.
MAX. UNBRACED BOTTOM CHORD LENGTH = 6.25 FT OR RIGID CEILING DIRECTLY APPLIED.

ALL PITCH BREAKS AND PERIMETER CORNER JOINTS MUST BE LATERALLY RESTRAINED.

[M]

DESIGN CRITERIA

SPECIFIED LOADS:

TOP CH.	LL	=	48.1	PSF
	DL	=	5.0	PSF
BOT CH.	LL	=	0.0	PSF
	DL	=	7.0	PSF
TOTAL LOAD		=	60.0	PSF

SPACING = 24.0 IN. C/C

THIS TRUSS IS DESIGNED FOR RESIDENTIAL OR SMALL BUILDING REQUIREMENTS OF PART 9, NBCC 2015

THIS DESIGN COMPLIES WITH:
- PART 9 OF BCBC 2018 , ABC 2019
- PART 9 OF OBC 2012 (2019 AMENDMENT)
- CSA 086-14
- TPIC 2014

(55 % OF 83.6 P.S.F. G.S.L. PLUS 2.1 P.S.F. RAIN LOAD) EQUALS 48.1 P.S.F. SPECIFIED ROOF LIVE LOAD

CSI: TC=0.11/1.00 (B-F:1) , BC=0.10/1.00 (D-E:1) , WB=0.08/1.00 (B-D:1) , SSI=0.10/1.00 (B-F:1)

DOL LUMBER=1.00 NAIL=1.00 LS BEND=1.10 COMP=1.10 SHEAR=1.10 TENS= 1.10

CONTINUED ON PAGE 2

JOB NAME	TRUSS NAME	QUANTITY	PLY	JOB DESC. Woodcreek / Adkins	DRWG NO.
211770	V8	1	1	TRUSS DESC.	

DRY: SEASONED LUMBER.

PLATES (table is in inches)

JT	TYPE	PLATES	W	LEN	Y	X
A	TBM1-h	MT20	3.0	4.0		
B	TTW+p	MT20	3.0	4.0	2.25	1.50
C	TBM1-h	MT20	3.0	4.0		
D	BMW1+w	MT20	1.0	4.0		

LOADING
TOTAL LOAD CASES: (4)

CHORDS

MEMB. FR-TO	MAX. FORCE (LBS)	FACTORED VERT. LOAD (PLF) FROM	TO	LC1	MAX CSI (LC)	MAX. UNBRAC LENGTH
A- F	0 / 169	-156.6	-156.6	0.03 (1)	10.00	
F- B	0 / 176	-156.6	-156.6	0.11 (1)	10.00	
B- H	0 / 176	-156.6	-156.6	0.11 (1)	10.00	
H- C	0 / 169	-156.6	-156.6	0.03 (1)	10.00	
A- E	-170 / 0	-17.5	-17.5	0.10 (1)	6.25	
E- D	-144 / 0	-17.5	-17.5	0.10 (1)	6.25	
D- G	-144 / 0	-17.5	-17.5	0.10 (1)	6.25	
G- C	-170 / 0	-17.5	-17.5	0.10 (1)	6.25	

WEBS

MEMB. FR-TO	MAX. FORCE (LBS)	MAX CSI (LC)
D- B	-527 / 0	0.08 (1)
E- F	-207 / 0	0.00 (1)
G- H	-207 / 0	0.00 (1)

COMPANION LIVE LOAD FACTOR = 1.00

TRUSS PLATE MANUFACTURER IS NOT RESPONSIBLE FOR QUALITY CONTROL IN THE TRUSS MANUFACTURING PLANT .

NAIL VALUES

PLATE	GRIP(DRY) (PSI) MAX	MIN	SHEAR (PLI) MAX	MIN	SECTION (PLI) MAX	MIN
MT20	650	371	1747	788	1987	1873

PLATE PLACEMENT TOL. = 0.250 inches

PLATE ROTATION TOL. = 5.0 Deg.

JSI GRIP= 0.53 (D) (INPUT = 0.90)
JSI METAL= 0.22 (D) (INPUT = 1.00)

JOB NAME	TRUSS NAME	QUANTITY	PLY	JOB DESC. Woodcreek / Adkins	DRWG NO.
211770	V9	1	1	TRUSS DESC.	

KAMLOOPS TRUSS LTD., Kamloops, BC V2H 1G3

Version 8.420 S Mar 22 2021 MiTek Industries, Inc. Thu May 27 07:08:47 2021 Page 1

ID:X2qvwXGfFYBXzZFl6ldjmRzCaiR-TziPcqp_zHVwYGBk5finEb15iQSzVugDm9grjtzCLUE

Scale = 1:52.2

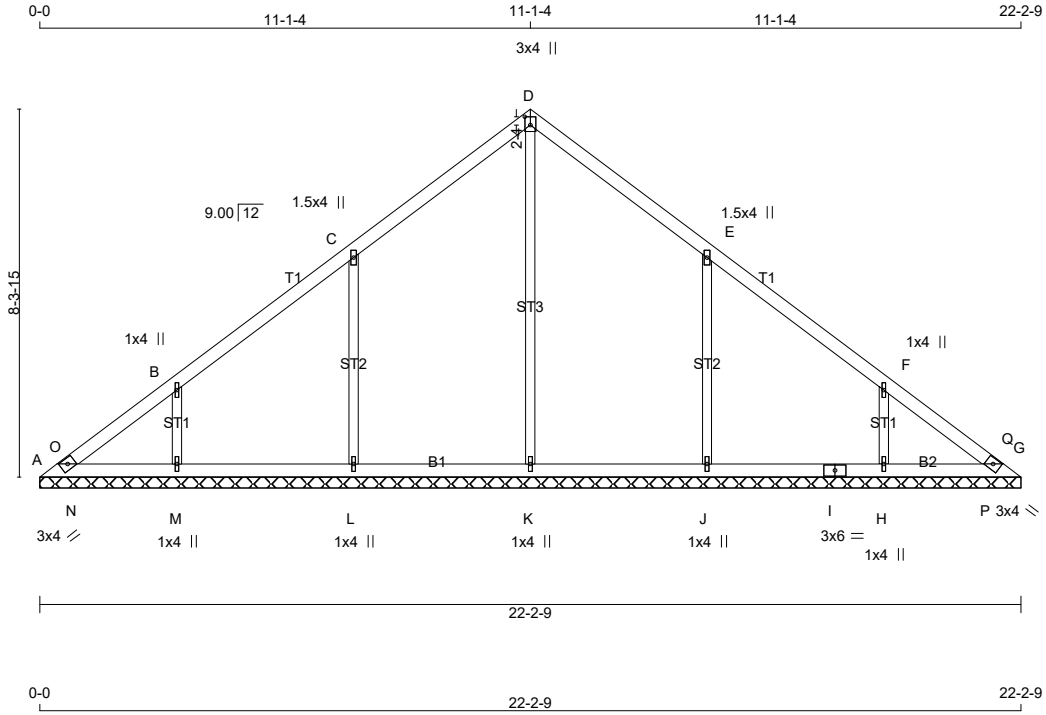

TOTAL WEIGHT = 73 lb

[M]

LUMBER

N. L. G. A. RULES

CHORDS	SIZE		LUMBER	DESCR.
A - D	2x4	DRY	1650F 1.5E	SPF
D - G	2x4	DRY	1650F 1.5E	SPF
A - I	2x4	DRY	1650F 1.5E	SPF
I - G	2x4	DRY	1650F 1.5E	SPF
ALL WEBS	2x3	DRY	No.2	SPF

DIMENSIONS, SUPPORTS AND LOADINGS SPECIFIED BY FABRICATOR TO BE VERIFIED BY BUILDING DESIGNER

BEARINGS

JT	FACTORED GROSS REACTION VERT	HORZ	MAXIMUM GROSS REACTION DOWN	FACTORED HORZ	UPLIFT	INPUT BRG IN-SX	REQRD BRG IN-SX
A	242	0	242	0	0	22-2-9 (4-2-9)	1-8
G	242	0	242	0	0	22-2-9 (4-2-9)	1-8
K	527	0	527	0	0	22-2-9 (4-2-9)	1-8
L	782	0	782	0	0	22-2-9 (4-2-9)	1-8
M	646	0	646	0	0	22-2-9 (4-2-9)	1-8
J	782	0	782	0	0	22-2-9 (4-2-9)	1-8
H	646	0	646	0	0	22-2-9 (4-2-9)	1-8

VALUE IN PARENTHESIS INDICATES EFFECTIVE BEARING LENGTH

UNFACTORED REACTIONS

JT	1ST LCASE COMBINED	MAX./MIN. COMPONENT REACTIONS SNOW	LIVE	PERM.LIVE	WIND	DEAD	SOIL
A	166	138 / 0	0 / 0	0 / 0	0 / 0	28 / 0	0 / 0
G	166	138 / 0	0 / 0	0 / 0	0 / 0	28 / 0	0 / 0
K	366	277 / 0	0 / 0	0 / 0	0 / 0	90 / 0	0 / 0
L	538	436 / 0	0 / 0	0 / 0	0 / 0	102 / 0	0 / 0
M	446	354 / 0	0 / 0	0 / 0	0 / 0	91 / 0	0 / 0
J	538	436 / 0	0 / 0	0 / 0	0 / 0	102 / 0	0 / 0
H	446	354 / 0	0 / 0	0 / 0	0 / 0	91 / 0	0 / 0

BEARING MATERIAL TO BE SPF NO.2 OR BETTER AT JOINT(S) A, G, K, L, M, J, H

DESIGN CRITERIA

SPECIFIED LOADS:

TOP CH.	LL	=	48.1	PSF
	DL	=	5.0	PSF
BOT CH.	LL	=	0.0	PSF
	DL	=	7.0	PSF
TOTAL LOAD		=	60.0	PSF

SPACING = 24.0 IN. C/C

THIS TRUSS IS DESIGNED FOR RESIDENTIAL OR SMALL BUILDING REQUIREMENTS OF PART 9, NBCC 2015

THIS DESIGN COMPLIES WITH:
- PART 9 OF BCBC 2018 , ABC 2019
- PART 9 OF OBC 2012 (2019 AMENDMENT)
- CSA 086-14
- TPIC 2014

(55 % OF 83.6 P.S.F. G.S.L. PLUS 2.1 P.S.F. RAIN LOAD) EQUALS 48.1 P.S.F. SPECIFIED ROOF LIVE LOAD

CSI: TC=0.32/1.00 (C-D:1) , BC=0.10/1.00 (H-P:1) , WB=0.60/1.00 (D-K:1) , SSI=0.24/1.00 (D-E:1)

DOL LUMBER=1.00 NAIL=1.00 LS BEND=1.10 COMP=1.10 SHEAR=1.10 TENS= 1.10

CONTINUED ON PAGE 2

JOB NAME	TRUSS NAME	QUANTITY	PLY	JOB DESC. Woodcreek / Adkins	DRWG NO.
211770	V9	1	1	TRUSS DESC.	

DRY: SEASONED LUMBER.

PLATES (table is in inches)

JT	TYPE	PLATES	W	LEN	Y	X
A	TBM1-h	MT20	3.0	4.0		
B	TMW+w	MT20	1.0	4.0		
C	TMW+w	MT20	1.5	4.0		
D	TTW+p	MT20	3.0	4.0	2.25	1.50
E	TMW+w	MT20	1.5	4.0		
F	TMW+w	MT20	1.0	4.0		
G	TBM1-h	MT20	3.0	4.0		
H, J, K, L, M						
H	BMW1+w	MT20	1.0	4.0		
I	BS-t	MT20	3.0	6.0		

BRACING

TOP CHORD TO BE SHEATHED OR MAX. PURLIN SPACING = 6.25 FT.
MAX. UNBRACED BOTTOM CHORD LENGTH = 10.00 FT OR RIGID CEILING DIRECTLY APPLIED.

ALL PITCH BREAKS AND PERIMETER CORNER JOINTS MUST BE LATERALLY RESTRAINED.

LOADING

TOTAL LOAD CASES: (4)

CHORDS

MEMB. FR-TO	MAX. FACTORED FORCE (LBS)	FACTORED VERT. LOAD (PLF) FROM	TO	LC1 MAX CSI (LC)	MAX. UNBRAC LENGTH
A- O	-103 / 0	-156.6	-156.6	0.04 (1)	6.25
O- B	-36 / 4	-156.6	-156.6	0.19 (1)	6.25
B- C	-41 / 2	-156.6	-156.6	0.32 (1)	6.25
C- D	-84 / 0	-156.6	-156.6	0.32 (1)	6.25
D- E	-84 / 0	-156.6	-156.6	0.32 (1)	6.25
E- F	-41 / 2	-156.6	-156.6	0.32 (1)	6.25
F- Q	-36 / 4	-156.6	-156.6	0.19 (1)	6.25
Q- G	-103 / 0	-156.6	-156.6	0.04 (1)	6.25
A- N	0 / 53	-17.5	-17.5	0.09 (1)	10.00
N- M	0 / 71	-17.5	-17.5	0.10 (1)	10.00
M- L	0 / 47	-17.5	-17.5	0.06 (1)	10.00
L- K	-1 / 34	-17.5	-17.5	0.05 (4)	10.00
K- J	-1 / 34	-17.5	-17.5	0.05 (4)	10.00
J- I	0 / 47	-17.5	-17.5	0.06 (1)	10.00
I- H	0 / 47	-17.5	-17.5	0.06 (1)	10.00
H- P	0 / 71	-17.5	-17.5	0.10 (1)	10.00
P- G	0 / 53	-17.5	-17.5	0.09 (1)	10.00

WEBS

MEMB. FR-TO	MAX. FACTORED FORCE (LBS)	MAX CSI (LC)
K- D	-453 / 0	0.60 (1)
L- C	-721 / 0	0.31 (1)
M- B	-533 / 0	0.08 (1)
J- E	-721 / 0	0.31 (1)
H- F	-533 / 0	0.08 (1)
N- O	-113 / 1	0.00 (1)
P- Q	-113 / 1	0.00 (1)

COMPANION LIVE LOAD FACTOR = 1.00

TRUSS PLATE MANUFACTURER IS NOT RESPONSIBLE FOR QUALITY CONTROL IN THE TRUSS MANUFACTURING PLANT .

NAIL VALUES

PLATE	GRIP(DRY) (PSI) MAX	MIN	SHEAR (PLI) MAX	MIN	SECTION (PLI) MAX	MIN
MT20	650	371	1747	788	1987	1873

PLATE PLACEMENT TOL. = 0.250 inches

PLATE ROTATION TOL. = 5.0 Deg.

JSI GRIP= 0.76 (F) (INPUT = 0.90)
JSI METAL= 0.56 (B) (INPUT = 1.00)

JOB NAME	TRUSS NAME	QUANTITY	PLY	JOB DESC. Woodcreek / Adkins	DRWG NO.
211770	V10	1	1	TRUSS DESC.	

KAMLOOPS TRUSS LTD., Kamloops, BC V2H 1G3

Version 8.420 S Mar 22 2021 MiTek Industries, Inc. Thu May 27 07:08:49 2021 Page 1

ID:X2qvwXGfFYBXzZFI6ldjmRzCaiR-QMq91WqEVulenaL6C4IFJ06PQD5kzo6WET9xnmzCLUC

Scale = 1:40.9

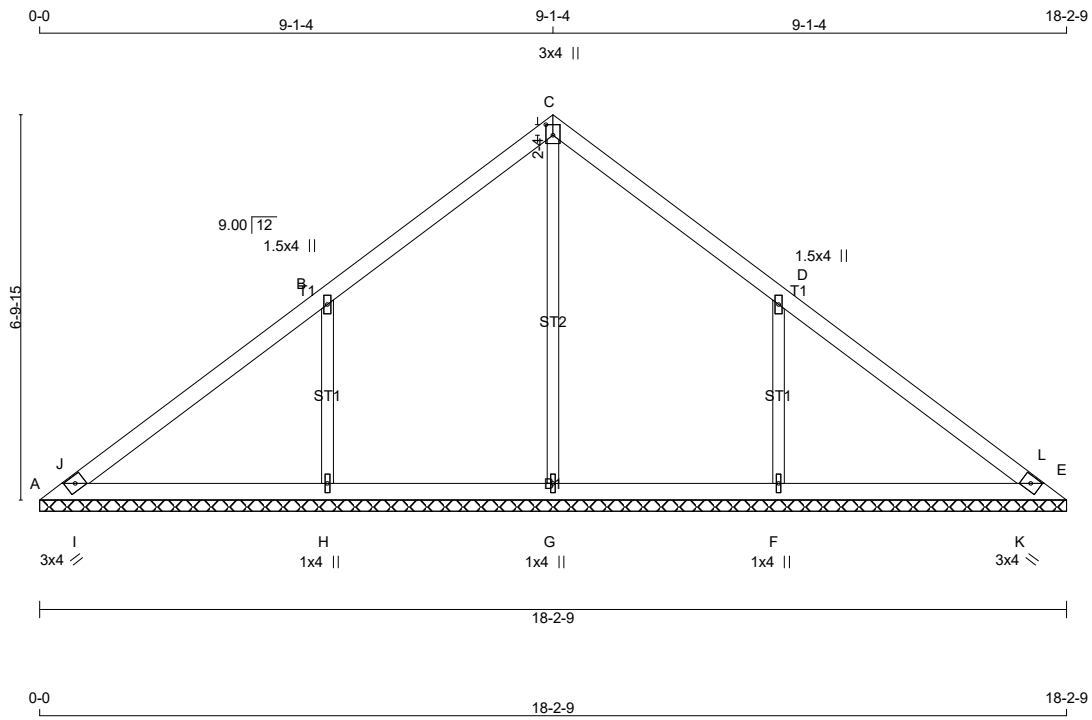

TOTAL WEIGHT = 56 lb

[M]

LUMBER

N. L. G. A. RULES

CHORDS	SIZE		LUMBER	DESCR.
A - C	2x4	DRY	1650F 1.5E	SPF
C - E	2x4	DRY	1650F 1.5E	SPF
A - E	2x4	DRY	1650F 1.5E	SPF
ALL WEBS	2x3	DRY	No.2	SPF

DIMENSIONS, SUPPORTS AND LOADINGS SPECIFIED BY FABRICATOR TO BE VERIFIED BY BUILDING DESIGNER

BEARINGS

JT	FACTORED GROSS REACTION VERT	HORZ	MAXIMUM FACTORED GROSS REACTION DOWN	HORZ	UPLIFT	INPUT BRG IN-SX	REQRD BRG IN-SX
A	212	0	212	0	0	18-2-9	1-8
E	212	0	212	0	0	18-2-9	1-8
G	807	0	807	0	0	18-2-9	1-8
H	970	0	970	0	0	18-2-9	1-8
F	970	0	970	0	0	18-2-9	1-8

UNFACTORED REACTIONS

JT	1ST LCASE COMBINED	MAX./MIN. COMPONENT REACTIONS SNOW	LIVE	PERM.LIVE	WIND	DEAD	SOIL
A	146	121 / 0	0 / 0	0 / 0	0 / 0	25 / 0	0 / 0
E	146	121 / 0	0 / 0	0 / 0	0 / 0	25 / 0	0 / 0
G	560	430 / 0	0 / 0	0 / 0	0 / 0	130 / 0	0 / 0
H	668	539 / 0	0 / 0	0 / 0	0 / 0	129 / 0	0 / 0
F	668	539 / 0	0 / 0	0 / 0	0 / 0	129 / 0	0 / 0

BEARING MATERIAL TO BE SPF NO.2 OR BETTER AT JOINT(S) A, E, G, H, F

BRACING

TOP CHORD TO BE SHEATHED OR MAX. PURLIN SPACING = 10.00 FT.
MAX. UNBRACED BOTTOM CHORD LENGTH = 6.25 FT OR RIGID CEILING DIRECTLY APPLIED.

ALL PITCH BREAKS AND PERIMETER CORNER JOINTS MUST BE LATERALLY RESTRAINED.

DESIGN CRITERIA

SPECIFIED LOADS:

TOP CH.	LL	=	48.1	PSF
	DL	=	5.0	PSF
BOT CH.	LL	=	0.0	PSF
	DL	=	7.0	PSF
TOTAL LOAD		=	60.0	PSF

SPACING = 24.0 IN. C/C

THIS TRUSS IS DESIGNED FOR RESIDENTIAL OR SMALL BUILDING REQUIREMENTS OF PART 9, NBCC 2015

THIS DESIGN COMPLIES WITH:
- PART 9 OF BCBC 2018 , ABC 2019
- PART 9 OF OBC 2012 (2019 AMENDMENT)
- CSA 086-14
- TPIC 2014

(55 % OF 83.6 P.S.F. G.S.L. PLUS 2.1 P.S.F. RAIN LOAD) EQUALS 48.1 P.S.F. SPECIFIED ROOF LIVE LOAD

CSI: TC=0.43/1.00 (D-L:1) , BC=0.21/1.00 (F-K:1) , WB=0.61/1.00 (C-G:1) , SSI=0.26/1.00 (D-L:1)

DOL LUMBER=1.00 NAIL=1.00 LS BEND=1.10 COMP=1.10 SHEAR=1.10 TENS= 1.10

CONTINUED ON PAGE 2

JOB NAME	TRUSS NAME	QUANTITY	PLY	JOB DESC. Woodcreek / Adkins	DRWG NO.
211770	V10	1	1	TRUSS DESC.	

KAMLOOPS TRUSS LTD., Kamloops, BC V2H 1G3

ID:X2qvwXGfFYBXzZFI6ldjmRzCaiR-QMq91WqEVulenaL6C4IFJ06PQD5kzo6WET9xnmzCLUC

DRY: SEASONED LUMBER.

PLATES (table is in inches)

JT	TYPE	PLATES	W	LEN	Y	X
A	TBM1-h	MT20	3.0	4.0		
B	TMW+w	MT20	1.5	4.0		
C	TTW+p	MT20	3.0	4.0	2.25	1.50
D	TMW+w	MT20	1.5	4.0		
E	TBM1-h	MT20	3.0	4.0		
F, G, H						
F	BMW1+w	MT20	1.0	4.0		

LOADING

TOTAL LOAD CASES: (4)

C H O R D S

MEMB. FR-TO	MAX. FORCE (LBS)	FACTORED VERT. LOAD (PLF) FROM	TO	LC1	MAX CSI (LC)	MAX. UNBRAC LENGTH
A- J	0 / 235	-156.6	-156.6	0.05	(1)	10.00
J- B	0 / 294	-156.6	-156.6	0.43	(1)	10.00
B- C	0 / 223	-156.6	-156.6	0.42	(1)	10.00
C- D	0 / 223	-156.6	-156.6	0.42	(1)	10.00
D- L	0 / 294	-156.6	-156.6	0.43	(1)	10.00
L- E	0 / 235	-156.6	-156.6	0.05	(1)	10.00
A- I	-247 / 0	-17.5	-17.5	0.20	(1)	6.25
I- H	-199 / 0	-17.5	-17.5	0.21	(1)	6.25
H- G	-219 / 0	-17.5	-17.5	0.12	(1)	6.25
G- F	-219 / 0	-17.5	-17.5	0.12	(1)	6.25
F- K	-199 / 0	-17.5	-17.5	0.21	(1)	6.25
K- E	-247 / 0	-17.5	-17.5	0.20	(1)	6.25

W E B S

MEMB. FR-TO	MAX. FORCE (LBS)	MAX CSI (LC)
G- C	-798 / 0	0.61 (1)
H- B	-801 / 0	0.18 (1)
F- D	-801 / 0	0.18 (1)
I- J	-296 / 10	0.00 (1)
K- L	-296 / 10	0.00 (1)

COMPANION LIVE LOAD FACTOR = 1.00

TRUSS PLATE MANUFACTURER IS NOT RESPONSIBLE FOR QUALITY CONTROL IN THE TRUSS MANUFACTURING PLANT .

NAIL VALUES

PLATE	GRIP(DRY) (PSI) MAX	MIN	SHEAR (PLI) MAX	MIN	SECTION (PLI) MAX	MIN
MT20	650	371	1747	788	1987	1873

PLATE PLACEMENT TOL. = 0.250 inches

PLATE ROTATION TOL. = 5.0 Deg.

JSI GRIP= 0.80 (H) (INPUT = 0.90)
JSI METAL= 0.57 (B) (INPUT = 1.00)

JOB NAME	TRUSS NAME	QUANTITY	PLY	JOB DESC. Woodcreek / Adkins	DRWG NO.
211770	V11	1	1	TRUSS DESC.	

KAMLOOPS TRUSS LTD., Kamloops, BC V2H 1G3

ID:X2qvwXGfFYBXzZFl6ldjmRzCaiR-MlxvSBsV1V?M1uVVKVnjORBn21qURpDphne2sezCLUA

Scale = 1:32.4

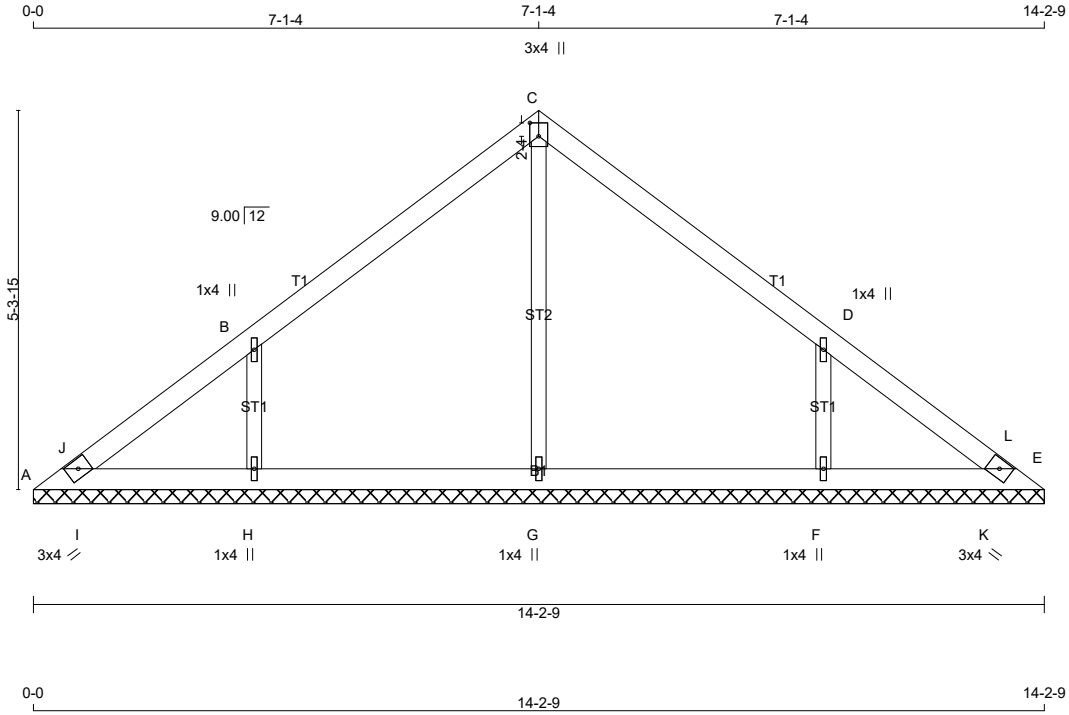

TOTAL WEIGHT = 42 lb

LUMBER

N. L. G. A. RULES

CHORDS	SIZE		LUMBER	DESCR.
A - C	2x4	DRY	1650F 1.5E	SPF
C - E	2x4	DRY	1650F 1.5E	SPF
A - E	2x4	DRY	1650F 1.5E	SPF
ALL WEBS	2x3	DRY	No.2	SPF

DIMENSIONS, SUPPORTS AND LOADINGS SPECIFIED BY FABRICATOR TO BE VERIFIED BY BUILDING DESIGNER

BEARINGS

JT	FACTORED GROSS REACTION VERT	HORZ	MAXIMUM FACTORED GROSS REACTION DOWN	HORZ	UPLIFT	INPUT BRG IN-SX	REQRD BRG IN-SX
A	213	0	213	0	0	14-2-9	1-8
E	213	0	213	0	0	14-2-9	1-8
G	515	0	515	0	0	14-2-9	1-8
H	767	0	767	0	0	14-2-9	1-8
F	767	0	767	0	0	14-2-9	1-8

UNFACTORED REACTIONS

JT	1ST LCASE COMBINED	MAX./MIN. COMPONENT REACTIONS SNOW	LIVE	PERM.LIVE	WIND	DEAD	SOIL
A	146	121 / 0	0 / 0	0 / 0	0 / 0	25 / 0	0 / 0
E	146	121 / 0	0 / 0	0 / 0	0 / 0	25 / 0	0 / 0
G	359	266 / 0	0 / 0	0 / 0	0 / 0	93 / 0	0 / 0
H	527	429 / 0	0 / 0	0 / 0	0 / 0	99 / 0	0 / 0
F	527	429 / 0	0 / 0	0 / 0	0 / 0	99 / 0	0 / 0

BEARING MATERIAL TO BE SPF NO.2 OR BETTER AT JOINT(S) A, E, G, H, F

BRACING

TOP CHORD TO BE SHEATHED OR MAX. PURLIN SPACING = 6.25 FT.
MAX. UNBRACED BOTTOM CHORD LENGTH = 10.00 FT OR RIGID CEILING DIRECTLY APPLIED.

ALL PITCH BREAKS AND PERIMETER CORNER JOINTS MUST BE LATERALLY RESTRAINED.

[M]

DESIGN CRITERIA

SPECIFIED LOADS:

TOP CH.	LL	=	48.1	PSF
	DL	=	5.0	PSF
BOT CH.	LL	=	0.0	PSF
	DL	=	7.0	PSF
TOTAL LOAD		=	60.0	PSF

SPACING = 24.0 IN. C/C

THIS TRUSS IS DESIGNED FOR RESIDENTIAL OR SMALL BUILDING REQUIREMENTS OF PART 9, NBCC 2015

THIS DESIGN COMPLIES WITH:
- PART 9 OF BCBC 2018 , ABC 2019
- PART 9 OF OBC 2012 (2019 AMENDMENT)
- CSA 086-14
- TPIC 2014

(55 % OF 83.6 P.S.F. G.S.L. PLUS 2.1 P.S.F. RAIN LOAD) EQUALS 48.1 P.S.F. SPECIFIED ROOF LIVE LOAD

CSI: TC=0.30/1.00 (B-C:1) , BC=0.06/1.00 (H-I:1) , WB=0.19/1.00 (C-G:1) , SSI=0.24/1.00 (C-D:1)

DOL LUMBER=1.00 NAIL=1.00 LS BEND=1.10 COMP=1.10 SHEAR=1.10 TENS= 1.10

CONTINUED ON PAGE 2

JOB NAME	TRUSS NAME	QUANTITY	PLY	JOB DESC. Woodcreek / Adkins	DRWG NO.
211770	V11	1	1	TRUSS DESC.	

KAMLOOPS TRUSS LTD., Kamloops, BC V2H 1G3

ID:X2qvwXGfFYBXzZFl6ldjmRzCaiR-MlxvSBsV1V?M1uVVKVnjORBn21qURpDphne2sezCLUA

DRY: SEASONED LUMBER.

PLATES (table is in inches)

JT	TYPE	PLATES	W	LEN	Y	X
A	TBM1-h	MT20	3.0	4.0		
B	TMW+w	MT20	1.0	4.0		
C	TTW+p	MT20	3.0	4.0	2.25	1.50
D	TMW+w	MT20	1.0	4.0		
E	TBM1-h	MT20	3.0	4.0		
F, G, H						
F	BMW1+w	MT20	1.0	4.0		

LOADING

TOTAL LOAD CASES: (4)

CHORDS

MEMB. FR-TO	MAX. FACTORED FORCE (LBS)	FACTORED VERT. LOAD (PLF) FROM	TO	LC1 MAX CSI (LC)	MAX. UNBRAC LENGTH
A- J	-109 / 0	-156.6	-156.6	0.06 (1)	6.25
J- B	-7 / 10	-156.6	-156.6	0.29 (1)	10.00
B- C	-88 / 0	-156.6	-156.6	0.30 (1)	6.25
C- D	-88 / 0	-156.6	-156.6	0.30 (1)	6.25
D- L	-7 / 10	-156.6	-156.6	0.29 (1)	10.00
L- E	-109 / 0	-156.6	-156.6	0.06 (1)	6.25
A- I	-2 / 61	-17.5	-17.5	0.06 (1)	10.00
I- H	0 / 71	-17.5	-17.5	0.06 (1)	10.00
H- G	-3 / 40	-17.5	-17.5	0.05 (4)	10.00
G- F	-3 / 40	-17.5	-17.5	0.05 (4)	10.00
F- K	0 / 71	-17.5	-17.5	0.06 (1)	10.00
K- E	-2 / 61	-17.5	-17.5	0.06 (1)	10.00

WEBS

MEMB. FR-TO	MAX. FACTORED FORCE (LBS)	MAX CSI (LC)
G- C	-453 / 0	0.19 (1)
H- B	-674 / 0	0.10 (1)
F- D	-674 / 0	0.10 (1)
I- J	-52 / 7	0.00 (1)
K- L	-52 / 7	0.00 (1)

COMPANION LIVE LOAD FACTOR = 1.00

TRUSS PLATE MANUFACTURER IS NOT RESPONSIBLE FOR QUALITY CONTROL IN THE TRUSS MANUFACTURING PLANT .

NAIL VALUES

PLATE	GRIP(DRY) (PSI) MAX	MIN	SHEAR (PLI) MAX	MIN	SECTION (PLI) MAX	MIN
MT20	650	371	1747	788	1987	1873

PLATE PLACEMENT TOL. = 0.250 inches

PLATE ROTATION TOL. = 5.0 Deg.

JSI GRIP= 0.88 (D) (INPUT = 0.90)
JSI METAL= 0.71 (B) (INPUT = 1.00)

JOB NAME	TRUSS NAME	QUANTITY	PLY	JOB DESC. Woodcreek / Adkins	DRWG NO.
211770	V12	1	1	TRUSS DESC.	

KAMLOOPS TRUSS LTD., Kamloops, BC V2H 1G3

ID:X2qvwXGfFYBXzZFl6ldjmRzCaiR-qxVlfXs7op7De24huClyxekwwR6xADIywROcO4zCLU9

Scale = 1:24.4

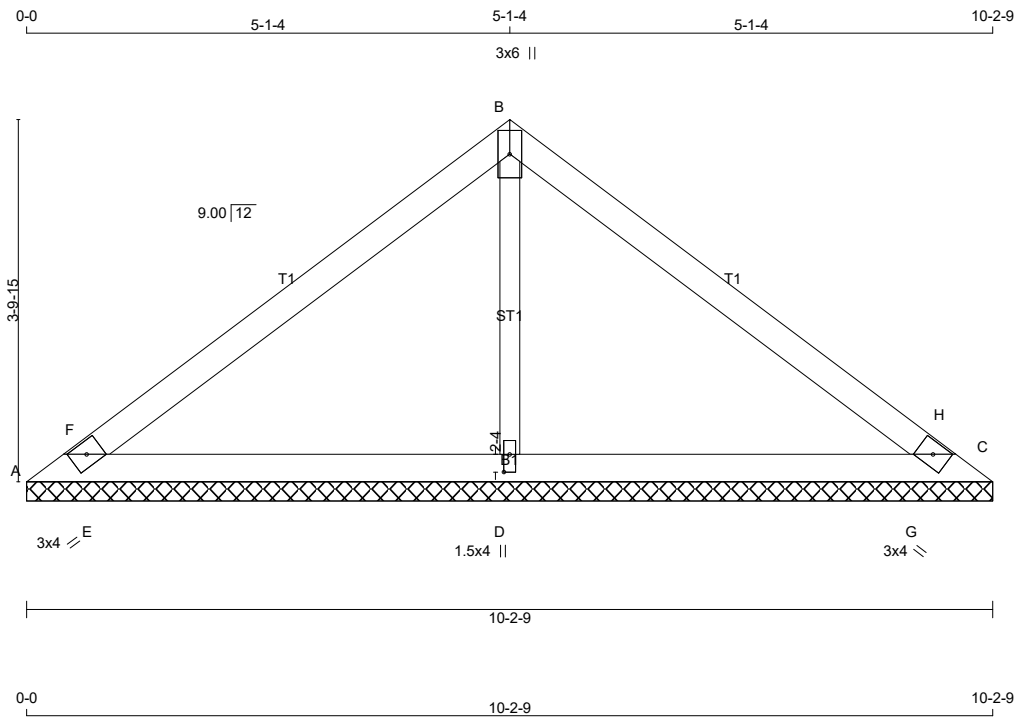

TOTAL WEIGHT = 28 lb

[M]

LUMBER

N. L. G. A. RULES

CHORDS	SIZE		LUMBER	DESCR.
A - B	2x4	DRY	1650F 1.5E	SPF
B - C	2x4	DRY	1650F 1.5E	SPF
A - C	2x4	DRY	1650F 1.5E	SPF
ALL WEBS	2x3	DRY	No.2	SPF

DIMENSIONS, SUPPORTS AND LOADINGS SPECIFIED BY FABRICATOR TO BE VERIFIED BY BUILDING DESIGNER

BEARINGS

	FACTORED GROSS REACTION		MAXIMUM FACTORED GROSS REACTION			INPUT BRG	REQRD BRG
JT	VERT	HORZ	DOWN	HORZ	UPLIFT	IN-SX	IN-SX
A	22	0	22	0	0	10-2-9	3-2
C	22	0	22	0	0	10-2-9	3-2
D	1735	0	1735	0	0	10-2-9	3-2

UNFACTORED REACTIONS

	1ST LCASE	MAX./MIN. COMPONENT REACTIONS					
JT	COMBINED	SNOW	LIVE	PERM.LIVE	WIND	DEAD	SOIL
A	15	11 / 0	0 / 0	0 / 0	0 / 0	4 / 0	0 / 0
C	15	11 / 0	0 / 0	0 / 0	0 / 0	4 / 0	0 / 0
D	1196	960 / 0	0 / 0	0 / 0	0 / 0	236 / 0	0 / 0

BEARING MATERIAL TO BE SPF NO.2 OR BETTER AT JOINT(S) A, C, D

BRACING

TOP CHORD TO BE SHEATHED OR MAX. PURLIN SPACING = 10.00 FT.
MAX. UNBRACED BOTTOM CHORD LENGTH = 6.25 FT OR RIGID CEILING DIRECTLY APPLIED.

ALL PITCH BREAKS AND PERIMETER CORNER JOINTS MUST BE LATERALLY RESTRAINED.

DESIGN CRITERIA

SPECIFIED LOADS:

TOP CH.	LL	=	48.1	PSF
	DL	=	5.0	PSF
BOT CH.	LL	=	0.0	PSF
	DL	=	7.0	PSF
TOTAL LOAD		=	60.0	PSF

SPACING = 24.0 IN. C/C

THIS TRUSS IS DESIGNED FOR RESIDENTIAL OR SMALL BUILDING REQUIREMENTS OF PART 9, NBCC 2015

THIS DESIGN COMPLIES WITH:
- PART 9 OF BCBC 2018 , ABC 2019
- PART 9 OF OBC 2012 (2019 AMENDMENT)
- CSA 086-14
- TPIC 2014

(55 % OF 83.6 P.S.F. G.S.L. PLUS 2.1 P.S.F. RAIN LOAD) EQUALS 48.1 P.S.F. SPECIFIED ROOF LIVE LOAD

CSI: TC=0.42/1.00 (B-H:1) , BC=0.30/1.00 (D-G:1) , WB=0.32/1.00 (B-D:1) , SSI=0.27/1.00 (C-G:1)

DOL LUMBER=1.00 NAIL=1.00 LS BEND=1.10 COMP=1.10 SHEAR=1.10 TENS= 1.10

CONTINUED ON PAGE 2

JOB NAME	TRUSS NAME	QUANTITY	PLY	JOB DESC. Woodcreek / Adkins	DRWG NO.
211770	V12	1	1	TRUSS DESC.	

DRY: SEASONED LUMBER.

PLATES (table is in inches)

JT	TYPE	PLATES	W	LEN	Y	X
A	TBM1-h	MT20	3.0	4.0		
B	TTW+p	MT20	3.0	6.0		
C	TBM1-h	MT20	3.0	4.0		
D	BMW1+w	MT20	1.5	4.0	2.25	0.75

LOADING
TOTAL LOAD CASES: (4)

CHORDS

MEMB. FR-TO	MAX. FACTORED FORCE (LBS)	FACTORED VERT. LOAD LC1 (PLF) FROM	TO	MAX CSI (LC)	MAX. UNBRAC LENGTH
A- F	0 / 722	-156.6	-156.6	0.27 (1)	10.00
F- B	0 / 675	-156.6	-156.6	0.42 (1)	10.00
B- H	0 / 675	-156.6	-156.6	0.42 (1)	10.00
H- C	0 / 722	-156.6	-156.6	0.27 (1)	10.00
A- E	-633 / 0	-17.5	-17.5	0.30 (1)	6.25
E- D	-558 / 0	-17.5	-17.5	0.30 (1)	6.25
D- G	-558 / 0	-17.5	-17.5	0.30 (1)	6.25
G- C	-633 / 0	-17.5	-17.5	0.30 (1)	6.25

WEBS

MEMB. FR-TO	MAX. FACTORED FORCE (LBS)	MAX CSI (LC)
D- B	-1445 / 0	0.32 (1)
E- F	-514 / 0	0.00 (1)
G- H	-514 / 0	0.00 (1)

COMPANION LIVE LOAD FACTOR = 1.00

TRUSS PLATE MANUFACTURER IS NOT RESPONSIBLE FOR QUALITY CONTROL IN THE TRUSS MANUFACTURING PLANT .

NAIL VALUES

PLATE	GRIP(DRY) (PSI) MAX	MIN	SHEAR (PLI) MAX	MIN	SECTION (PLI) MAX	MIN
MT20	650	371	1747	788	1987	1873

PLATE PLACEMENT TOL. = 0.250 inches

PLATE ROTATION TOL. = 5.0 Deg.

JSI GRIP= 0.82 (D) (INPUT = 0.90)
JSI METAL= 0.40 (D) (INPUT = 1.00)

JOB NAME	TRUSS NAME	QUANTITY	PLY	JOB DESC. Woodcreek / Adkins	DRWG NO.
211770	V13	1	1	TRUSS DESC.	

KAMLOOPS TRUSS LTD., Kamloops, BC V2H 1G3

Version 8.420 S Mar 22 2021 MiTek Industries, Inc. Thu May 27 07:08:54 2021 Page 1

ID:X2qvwXGfFYBXzZFl6ldjmRzCaiR-mKd24DuNJQOxuLE4?dKQ03pKmEq9eBNFNktiSzzCLU7

Scale = 1:16.4

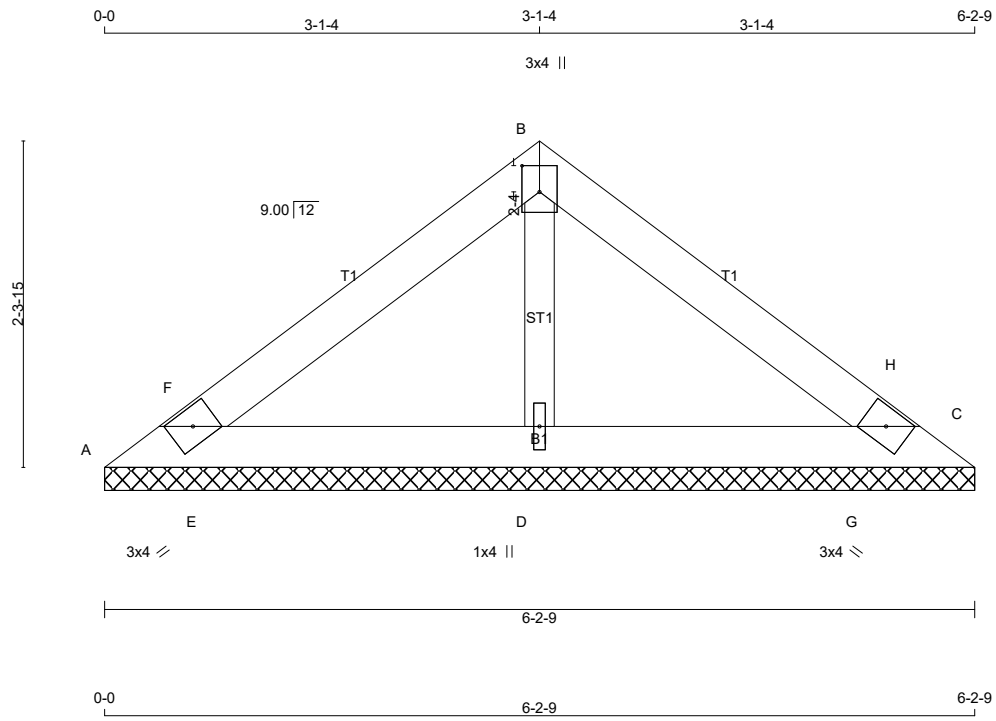

TOTAL WEIGHT = 16 lb

LUMBER

N. L. G. A. RULES

CHORDS	SIZE		LUMBER	DESCR.
A - B	2x4	DRY	1650F 1.5E	SPF
B - C	2x4	DRY	1650F 1.5E	SPF
A - C	2x4	DRY	1650F 1.5E	SPF
ALL WEBS	2x3	DRY	No.2	SPF

DIMENSIONS, SUPPORTS AND LOADINGS SPECIFIED BY FABRICATOR TO BE VERIFIED BY BUILDING DESIGNER

BEARINGS

JT	FACTORED GROSS REACTION VERT	HORZ	MAXIMUM FACTORED GROSS REACTION DOWN	HORZ	UPLIFT	INPUT BRG	REQRD BRG
A	122	0	122	0	0	6-2-9	1-8
C	122	0	122	0	0	6-2-9	1-8
D	837	0	837	0	0	6-2-9	1-8

UNFACTORED REACTIONS

JT	1ST LCASE COMBINED	MAX./MIN. COMPONENT REACTIONS SNOW	LIVE	PERM.LIVE	WIND	DEAD	SOIL
A	84	68 / 0	0 / 0	0 / 0	0 / 0	16 / 0	0 / 0
C	84	68 / 0	0 / 0	0 / 0	0 / 0	16 / 0	0 / 0
D	577	460 / 0	0 / 0	0 / 0	0 / 0	117 / 0	0 / 0

BEARING MATERIAL TO BE SPF NO.2 OR BETTER AT JOINT(S) A, C, D

BRACING

TOP CHORD TO BE SHEATHED OR MAX. PURLIN SPACING = 10.00 FT.
MAX. UNBRACED BOTTOM CHORD LENGTH = 6.25 FT OR RIGID CEILING DIRECTLY APPLIED.

ALL PITCH BREAKS AND PERIMETER CORNER JOINTS MUST BE LATERALLY RESTRAINED.

[M]

DESIGN CRITERIA

SPECIFIED LOADS:

TOP	CH.	LL	=	48.1	PSF
		DL	=	5.0	PSF
BOT	CH.	LL	=	0.0	PSF
		DL	=	7.0	PSF
TOTAL	LOAD		=	60.0	PSF

SPACING = 24.0 IN. C/C

THIS TRUSS IS DESIGNED FOR RESIDENTIAL OR SMALL BUILDING REQUIREMENTS OF PART 9, NBCC 2015

THIS DESIGN COMPLIES WITH:
- PART 9 OF BCBC 2018 , ABC 2019
- PART 9 OF OBC 2012 (2019 AMENDMENT)
- CSA 086-14
- TPIC 2014

(55 % OF 83.6 P.S.F. G.S.L. PLUS 2.1 P.S.F. RAIN LOAD) EQUALS 48.1 P.S.F. SPECIFIED ROOF LIVE LOAD

CSI: TC=0.14/1.00 (B-H:1) , BC=0.12/1.00 (D-G:1) , WB=0.09/1.00 (B-D:1) , SSI=0.12/1.00 (B-H:1)

DOL LUMBER=1.00 NAIL=1.00 LS BEND=1.10 COMP=1.10 SHEAR=1.10 TENS= 1.10

CONTINUED ON PAGE 2

JOB NAME	TRUSS NAME	QUANTITY	PLY	JOB DESC. Woodcreek / Adkins	DRWG NO.
211770	V13	1	1	TRUSS DESC.	

KAMLOOPS TRUSS LTD., Kamloops, BC V2H 1G3

ID:X2qvwXGfFYBXzZFl6ldjmRzCaiR-mKd24DuNJQOxuLE4?dKQ03pKmEq9eBNFNktiSzzCLU7

DRY: SEASONED LUMBER.

PLATES (table is in inches)

JT	TYPE	PLATES	W	LEN	Y	X
A	TBM1-h	MT20	3.0	4.0		
B	TTW+p	MT20	3.0	4.0	2.25	1.50
C	TBM1-h	MT20	3.0	4.0		
D	BMW1+w	MT20	1.0	4.0		

LOADING

TOTAL LOAD CASES: (4)

CHORDS

MEMB. FR-TO	MAX. FACTORED FORCE (LBS)	FACTORED VERT. LOAD LC1 (PLF) FROM	TO	MAX CSI (LC)	MAX. UNBRAC LENGTH
A- F	0 / 219	-156.6	-156.6	0.05 (1)	10.00
F- B	0 / 223	-156.6	-156.6	0.14 (1)	10.00
B- H	0 / 223	-156.6	-156.6	0.14 (1)	10.00
H- C	0 / 219	-156.6	-156.6	0.05 (1)	10.00
A- E	-214 / 0	-17.5	-17.5	0.12 (1)	6.25
E- D	-183 / 0	-17.5	-17.5	0.12 (1)	6.25
D- G	-183 / 0	-17.5	-17.5	0.12 (1)	6.25
G- C	-214 / 0	-17.5	-17.5	0.12 (1)	6.25

WEBS

MEMB. FR-TO	MAX. FACTORED FORCE (LBS)	MAX CSI (LC)
D- B	-624 / 0	0.09 (1)
E- F	-238 / 0	0.00 (1)
G- H	-238 / 0	0.00 (1)

COMPANION LIVE LOAD FACTOR = 1.00

TRUSS PLATE MANUFACTURER IS NOT RESPONSIBLE FOR QUALITY CONTROL IN THE TRUSS MANUFACTURING PLANT .

NAIL VALUES

PLATE	GRIP(DRY) (PSI) MAX	MIN	SHEAR (PLI) MAX	MIN	SECTION (PLI) MAX	MIN
MT20	650	371	1747	788	1987	1873

PLATE PLACEMENT TOL. = 0.250 inches

PLATE ROTATION TOL. = 5.0 Deg.

JSI GRIP= 0.62 (D) (INPUT = 0.90)
JSI METAL= 0.26 (D) (INPUT = 1.00)